RELION® PROTECTION AND CONTROL

REX640

Product Guide



Contents

1 Description 3
2 Application packages.... 3
3 Relay hardware....5
4 Human-machine interface.... 9
5 Local HMI....12
6 Switchgear HMI....13
7 Application....15
8 Supported ABB solutions....22
9 Control....23
10 High-speed transfer device (HSTD)....24
11 Arc flash protection.... 28
12 Power transformer differential protection....28
13 Measurements.... 29
14 Power quality....29
15 Fault locator.... 30
16 Disturbance recorder.... 30
17 Event log.... 30
18 Recorded data.... 31
19 Load profile....31
20 Trip circuit supervision....31
21 Self-supervision.... 32
22 Access control and cyber security....32
23 Station communication....32
24 Asset monitoring and management....37
25 Protection communication and supervision....37
26 Technical data.... 37
27 Mounting methods....161
28 Selection and ordering data....161
29 Modification Sales....161
30 Accessories and ordering data.... 161
31 Tools....165
32 Module diagrams....166
33 Certificates.... 183
34 References.... 183
35 REX640 Functions, codes and symbols....184
36 Contents of application packages....190
37 Document revision history.... 201

Disclaimer

The information in this document is subject to change without notice and should not be construed as a commitment by ABB. ABB assumes no responsibility for any errors that may appear in this document.

© Copyright 2026 ABB

All rights reserved.

Trademarks

ABB and Relion are registered trademarks of the ABB Group. All other brand or product names mentioned in this document may be trademarks or registered trademarks of their respective holders.

Conformity

This product complies with following directive and regulations.

Directives of the European parliament and of the council:

- Electromagnetic compatibility (EMC) Directive 2014/30/EU
- Low-voltage Directive 2014/35/EU
- RoHS Directive 2011/65/EU
- RoHS Directive (EU) 2015/863 amending Annex II

UK legislations:

- Electromagnetic Compatibility Regulations 2016
- Electrical Equipment (Safety) Regulations 2016
- The Restriction of the Use of Certain Hazardous Substances in Electrical and Electronic Equipment Regulations 2012

These conformities are the result of tests conducted by the third-party testing in accordance with the product standard EN / BS EN 60255-26 for the EMC directive / regulation, and with the product standards EN / BS EN 60255-1 and EN / BS EN 60255-27 for the low voltage directive / safety regulation.

The product is designed in accordance with the international standards of the IEC 60255 series.

1. Description

REX640 is a powerful all-in-one protection and control relay for use in advanced power distribution and generation applications with unmatched flexibility available during the complete life cycle of the device – from ordering of the device, through testing and commissioning to upgrading the functionality of the modular software and hardware as application requirements change.

REX640 is available in two different case widths: a narrow case offering five module slots and a standard case offering seven module slots. Software options are identical for both case sizes.

The modular design of both hardware and software elements facilitates the coverage of any comprehensive protection application requirement that may arise during the complete life cycle of the relay and substation.

REX640 makes modification and upgrading easy and pushes the limits of what can be achieved with a single device.

2. Application packages

REX640 offers comprehensive base functionality. However, it is possible to further adapt the product to meet special installation needs by including any number of the available optional application packages into a single REX640 relay. For the selected application packages, the functionality can be extended by including the related add-on package. The REX640 connectivity package guides the engineer in optimizing the application configuration and its performance.

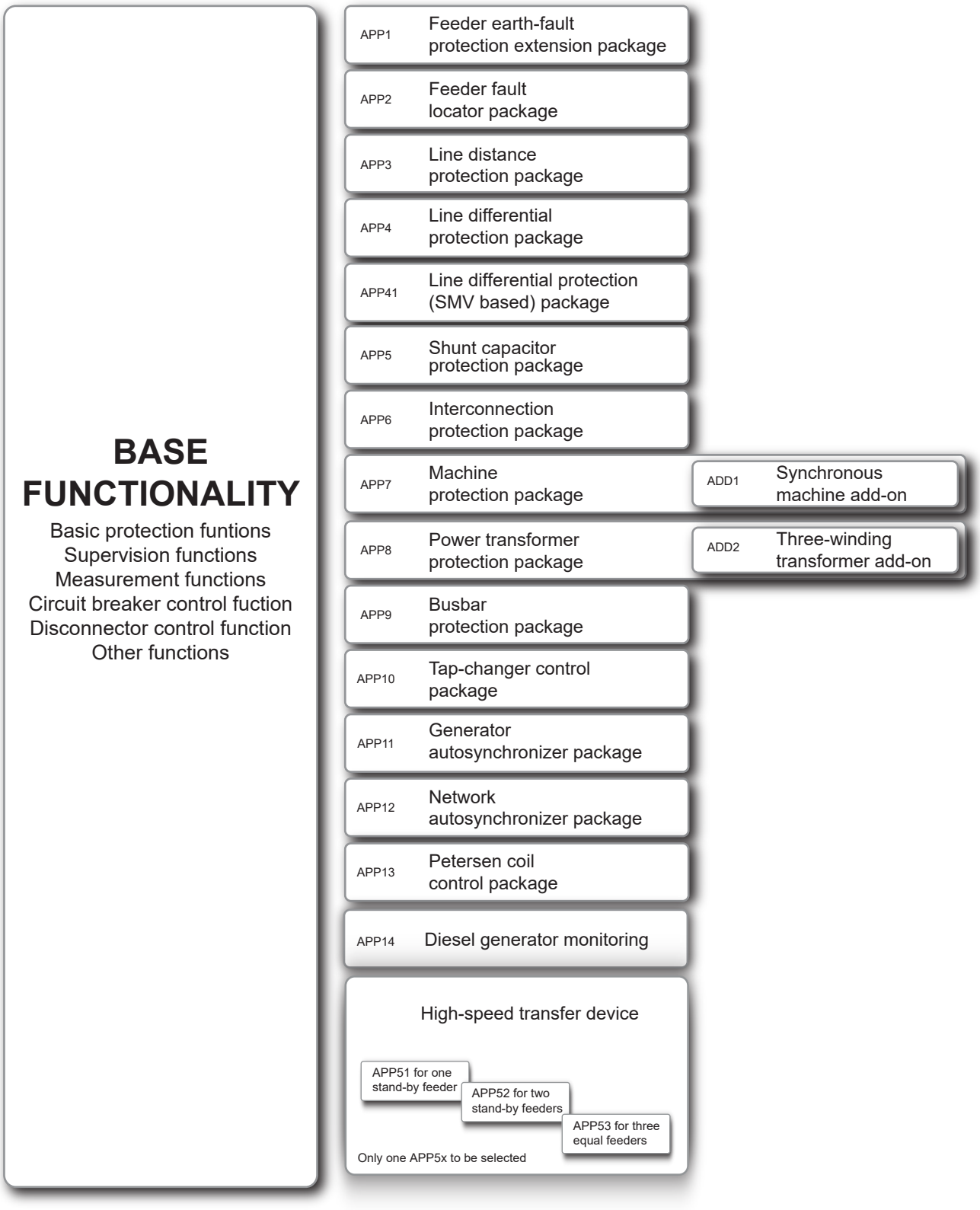

Figure 1: REX640 base and optional functionality

3. Relay hardware

The relay has mandatory and optional slots. A mandatory slot always contains a module but an optional slot may be empty, depending on the composition variant ordered.

Table 1: Module slots

Module	Standard case							
	Slot A1	Slot A2	Slot B	Slot C	Slot D	Slot E	Slot F	Slot G
	Narrow case							
	Slot A1	Slot A2	Slot B	Slot C	------	------	Slot F	Slot G
ARC1901	o							
COM1901		•						
COM1902		•						
COM1903		•						
COM1904		•						
COM1905		•						
BIO1901			•	o	o			
BIO1902			•	o	o			
BIO1903						o		
BIO1904						o		
BIM1901			•	o	o			
BIM1903						o		
RTD1901				o	o			
RTD1902				o	o			
AIM1901						o	o	
AIM1902						o	o	
AIM1903						o	o	
SIM1901						o	o	
SIM1902						o	o	
SIM1903						o	o	
PSM1901								•
PSM1902								•

Table continues on the next page

Module	Standard case							
	Slot A1	Slot A2	Slot B	Slot C	Slot D	Slot E	Slot F	Slot G
	Narrow case							
	Slot A1	Slot A2	Slot B	Slot C	------	------	Slot F	Slot G
PSM1903								•

• = Mandatory to have one of the allocated modules in the slot

o = Optional to have one of the allocated modules in the slot. The population (order) of the modules in the optional slots depends on the composition variant ordered.

Visit ABB Relays-Online *https://relays.protection-control.abb* for more information about the product and assistance in ordering.

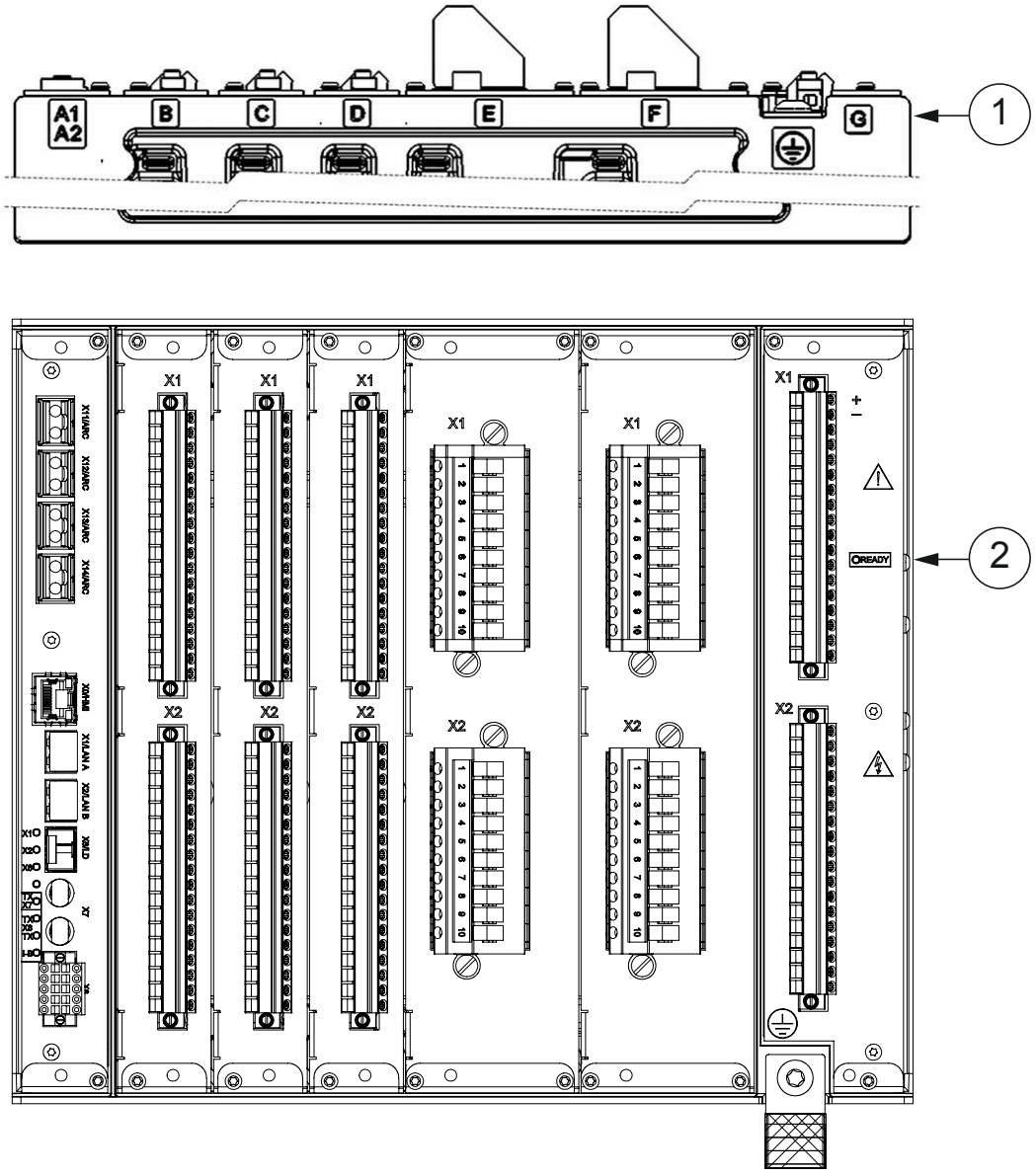

1 Slot markings in enclosure (top and bottom) 2 Ready LED

Figure 2: Hardware module slot overview of standard housing

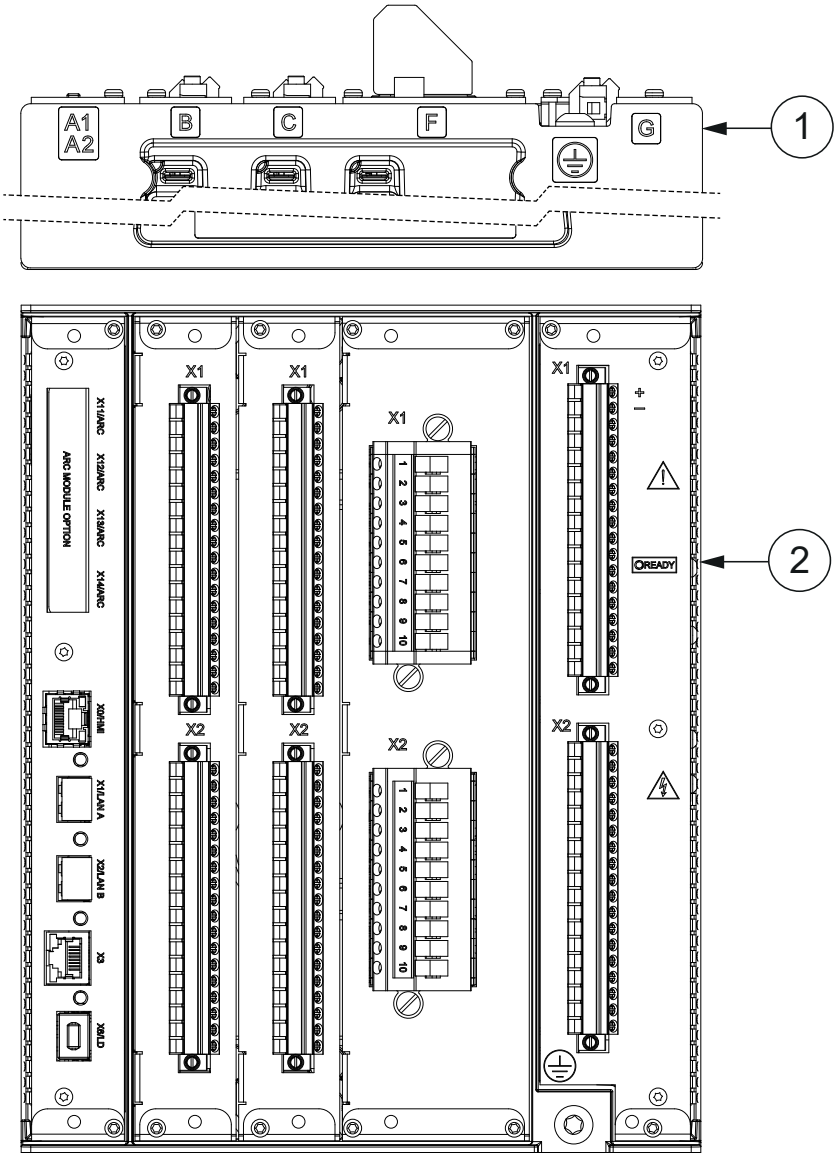

1 Slot markings in enclosure (top and bottom) 2 Ready LED

Figure 3: Hardware module slot overview of narrow housing

Table 2: Module description

Module	Description
ARC1901	4 × ARC sensor inputs (lense, loop or mixed)
COM1901	1 × RJ-45 (LHMI port) + 3 × RJ-45 + 1 × LD-SFP[1]
COM1902	1 × RJ-45 (LHMI port) + 2 × LC + 1 × RJ-45 + 1 × LD-SFP

Table continues on the next page

[1] Line distance/line differential protection communication + binary signal transfer, optical multi-mode or single-mode LC small form-factor pluggable transceiver (SFP)

Module	Description
COM1903	1 × RJ-45 (LHMI port) + 3 × LC + 1 × LD-SFP
COM1904	1 × RJ-45 (LHMI port) + 2 × RJ-45 + 1 × LD-SFP + 1 × RS-485/IRIG-B + 1 × FO UART
COM1905	1 × RJ-45 (LHMI port) + 2 × LC + 1 × LD-SFP + 1 × RS-485/IRIG-B + 1 × FO UART
BIO1901/ BIO1903	14 × BI + 8 × SO
BIO1902/ BIO1904	6 × SPO + 2 × SPO (TCS) + 9 × BI
BIM1901/BIM1903	24 BI
RTD1901	10 × RTD channels + 2 × mA channels (input/output)
RTD1902	3 × RTD channels + 6 × mA channels (input or output) + 12 × BI
AIM1901	4 × CT (1/5 A) + 1 × CT (0.2/1 A for residual current only) + 5 × VT
AIM1902	6 × CT (1/5 A) + 4 × VT
AIM1903	7 × CT (1/5 A) + 3 × VT
SIM1901	3 × combi sensor inputs (RJ-45, IEC 60044) + 1 × CT (0.2/1 A for residual current only) + 1 × VT
SIM1902	3 × combi sensor inputs (RJ-45, IEC 61869) + 1 × CT (0.2/1 A for residual current only) + 1 × VT
SIM1903	2 × 3 combi sensor (RJ-45, IEC 61869)
PSM1901	24...60 VDC, 3 × PO (TCS) + 2 × PO + 3 × SO + 2 × SSO
PSM1902	48...250 VDC / 100...240 VAC, 3 × PO (TCS) + 2 × PO + 3 × SO + 2 × SSO
PSM1903	110/125 VDC (77...150 VDC), 3 × PO (TCS) + 2 × PO + 3 × SO + 2 × SSO

PO = Power Output

SO = Signal Output

SPO = Static Power Output

SSO = Static Signal Output

The relay has a nonvolatile memory which does not need any periodical maintenance. The nonvolatile memory stores all events, recordings and logs to a memory which retains data if the relay loses its auxiliary supply.

4. Human-machine interface

REX640 offers different possibilities for creating a humanmachine interface.

- Local HMI (LHMI)
- Switchgear HMI (SHMI)
- Web HMI (WHMI)

The optimum HMI solution can be freely selected. The considerations can cover, for example, the physical installation location, frequency of usage or operators' preference.

LHMI can be connected directly to a dedicated port on the relay's communication module. If a longer distance between the relay and the LHMI is required, the LHMI can be connected into the station Ethernet communication network. In both cases, an LHMI is dedicated to a certain relay and only one LHMI can be connected to one relay.

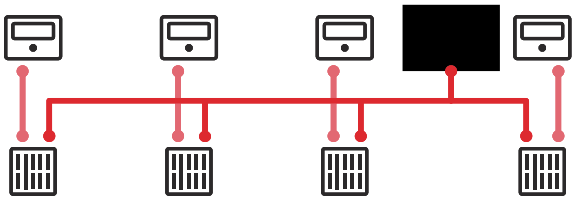

Figure 4: Local HMIs connected directly to the relays

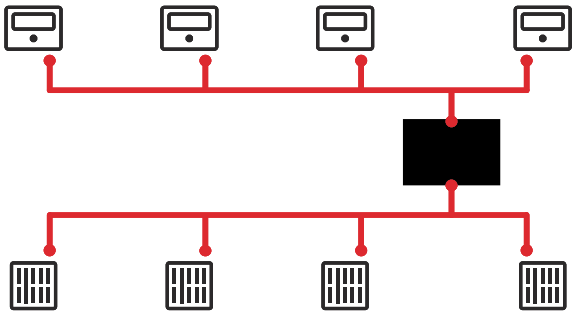

Figure 5: Local HMIs connected to the relays via a communication network

SHMI can be connected into a station Ethernet communication network. A single SHMI can serve up to 20 relays. The SHMI provides switchgear level status information as well as an access point to the LHMI level relay information. LHMI and SHMI panels cannot be connected simultaneously to the same relay.

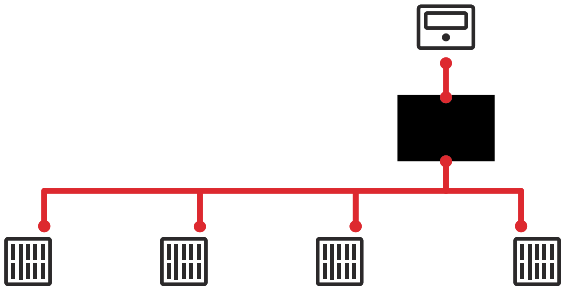

Figure 6: Switchgear HMI connected to the relays

The REX640 relays are fully operational even without any connection to a physical HMI. The relays include a Web server enabling access by the WHMI. The Web server is disabled by default and must be enabled by a parameter change. The WHMI can also be used even if the relay is connected to a physical HMI.

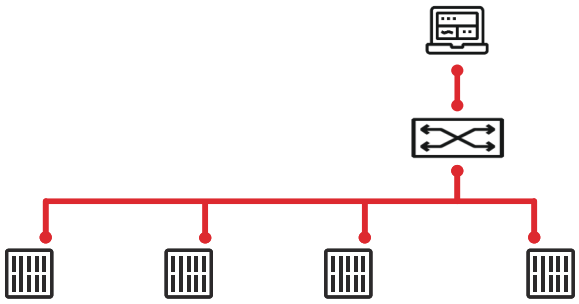

Figure 7: Web HMI connected to the relays

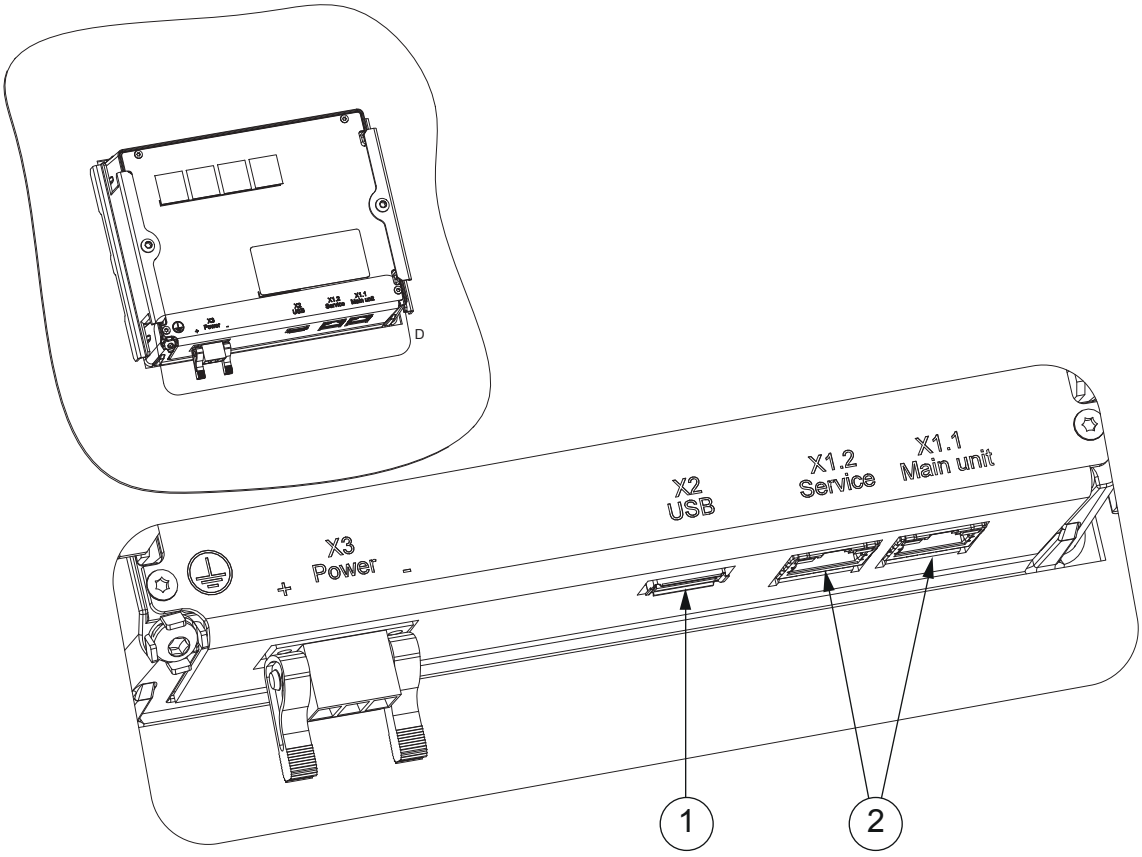

Figure 8: HMI connectors

1 USB port

2 RJ-45 ports

The main unit port X1.1 is used to connect the LHMI directly to the relay. In case of a remotely installed LHMI or SHMI, the connector X1.1 is used for Ethernet switch connection. The service port X1.2 is used for PCM600 or WHMI connection. The USB port X2 is used for inserting a USB memory stick to enable data retrieval from the relay.

5. Local HMI

The LHMI uses rugged 7-inch high resolution color screen with capacitive touch sensing technology. The user interface has been carefully designed to offer the best situational awareness to the user. Visualization of the primary process measurements, events, alarms and switching objects' statuses makes the local interaction with the relay extremely easy and self-evident. The LHMI provides a control point for the selected primary devices via pop-up operator dialogs.

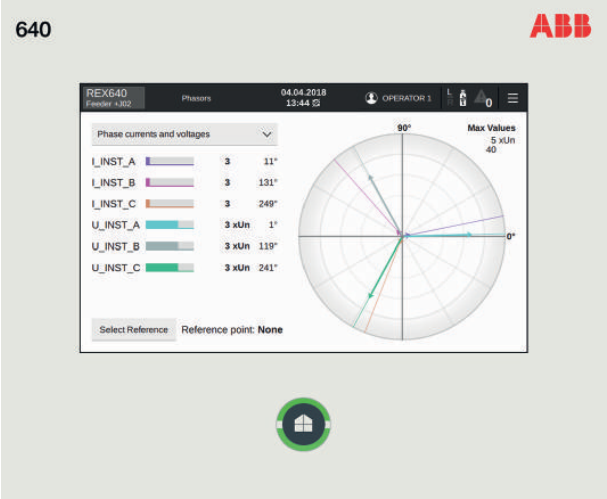

Figure 9: Phasor presentation of measurements as an example of local HMI pages

Additionally, the LHMI supports the engineer during the relay's testing, commissioning and troubleshooting activities. The information, traditionally accessible through different paths within the menu structure, is provided in collectively grouped and visualized format.

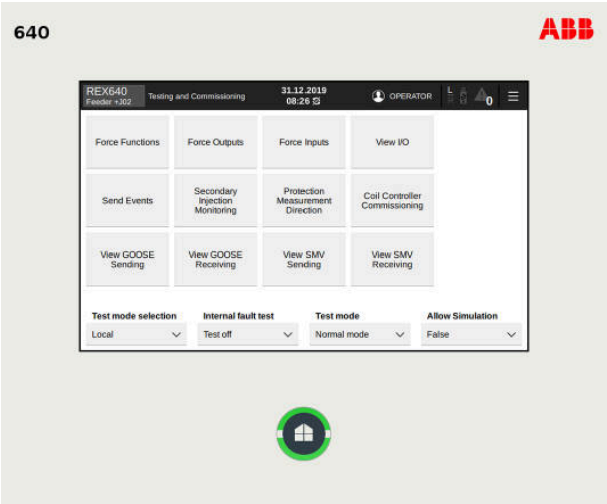

Figure 10: Test and commissioning support in the local HMI

The Home button at the bottom of the LHMI indicates the relay's status at a glance. In normal situations, the Home button shows a steady green light. Any other situation that requires the operator's attention is indicated with a flashing light, a red light or a combination of these.

The LHMI presents pages in two categories: the Operator pages and the Engineer pages. The Operator pages include the ones which are typically required as a part of an operator's normal activities, such as a single-line diagram, controls, measurements, events, alarms, and so on. The Engineer's pages include specifically designed pages supporting relay parametrization, troubleshooting, testing and commissioning activities.

The Operator pages can be used as such or customized according to the project's requirements using Graphical Display Editor (GDE) within the PCM600 software tool. The Engineer pages are fixed and cannot be customized.

The Operator pages can be scrolled either by tapping the Home button or by swiping the actual pages. The Engineer pages are accessible by touching the upper horizontal section of the screen.

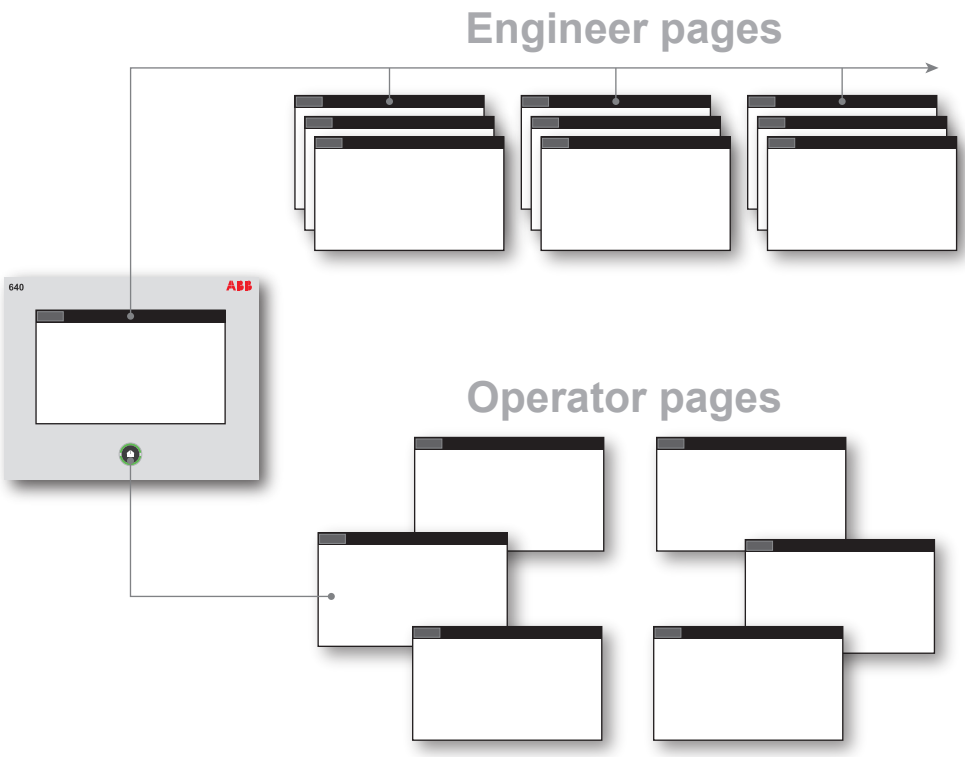

Figure 11: Local HMI pages

The LHMI is an accessory for the relay which is fully operational even without the LHMI. The relay communication card has a dedicated port where the LHMI is connected using an RJ-45 connector and a CAT6 S/FTP cable. The LHMI can be connected to the relay also via station communication network if a longer distance is required between the relay and the LHMI.

Additionally, the LHMI contains one Ethernet service port with an RJ-45 connector and one USB port. The service port can be used for the PCM600 connection or for WHMI connection. Data transfer to a USB memory is enabled via the USB port. By default the USB port is disabled and has to be taken into use with a specific parameter.

REX640 can be used as a centralized alarm annunciator. 66pcs of programmable LED functions are available within the graphical application configuration. The LED functions can be controlled by any physical input, GOOSE based or relay's internal binary signal. The Graphical Display Editor (GDE) tool component in PCM600 offers ready made pages for alarm visualization covering 64 alarm channels.

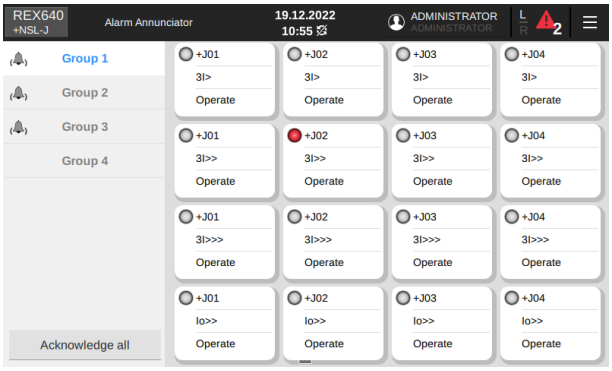

Figure 12: Alarm annunciator visualization on HMI

6. Switchgear HMI

The SHMI uses the same rugged 7-inch high resolution color screen with capacitive touch sensing technology as the LHMI. The user interface has been carefully designed to offer the best situational awareness to the user. SHMI navigation page provides an overview of the complete switchgear lineup. Four switchgear panels can be shown simultaneously on the navigation page, and the other panels

can be seen by tapping the SHMI panel Home button or by swiping the screen. A single SHMI can support up to 20 relays, and an installation can include several non-overlapping SHMI panels.

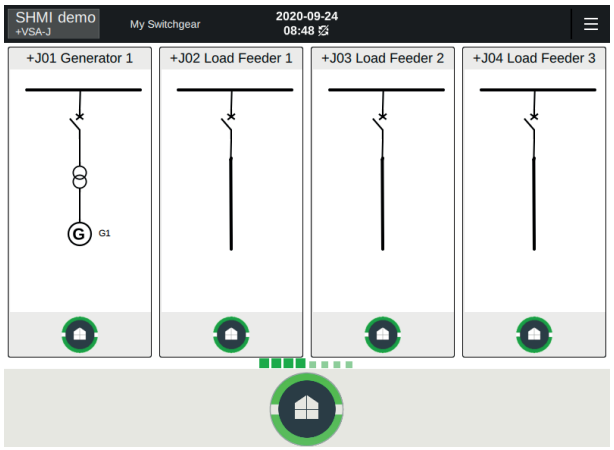

Figure 13: Switchgear HMI navigation page

On the navigation page, each switchgear panel can be represented by a dynamic single-line diagram, static figure or even by a photo of the actual panel. The panel-wise representation includes a virtual home button indicating the status of the relay within the panel. The SHMI's physical Home button indicates the common status of the complete switchgear lineup. After tapping on selected switchgear panel on the navigation page, the SHMI connects to the relay. When the connection is established, the SHMI provides all the same features as the LHMI.

If the switchgear lineup on the navigation page is presented by a dynamic single-line diagram, the actual primary switching device's actual positions are shown. To control a primary object, the panel must first be selected from the navigation page. When the SHMI is connected to the selected relay, the control can be carried out in a similar manner as with the LHMI.

SHMI automatically stores backups of the connected relays' configurations. If a relay needs to be replaced with a spare relay that has at least same capabilities as the original one, the relay configuration and parameters can be restored from the SHMI panel.

7. Application

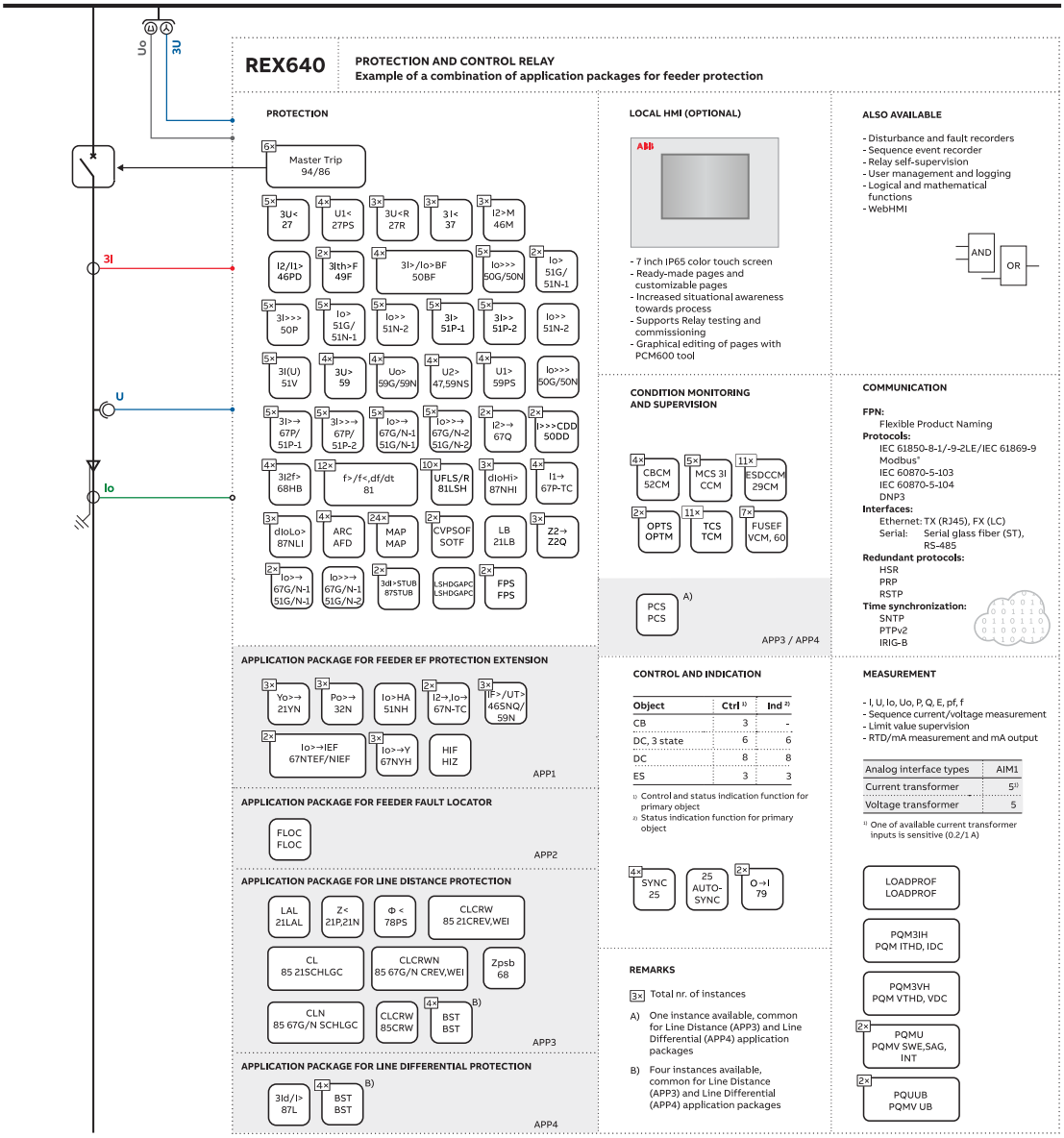

Figure 14: Feeder application

Figure 14 presents REX640 in a feeder application. The base functionality is enhanced with application packages providing both line distance and line differential protections. To provide additional protection against earth faults along the feeder, an additional application package has been selected. Conventional measuring transformers are used in the example case. The AIM1 analog input card provides the best match for them with five voltage and five current inputs, one being a sensitive input.

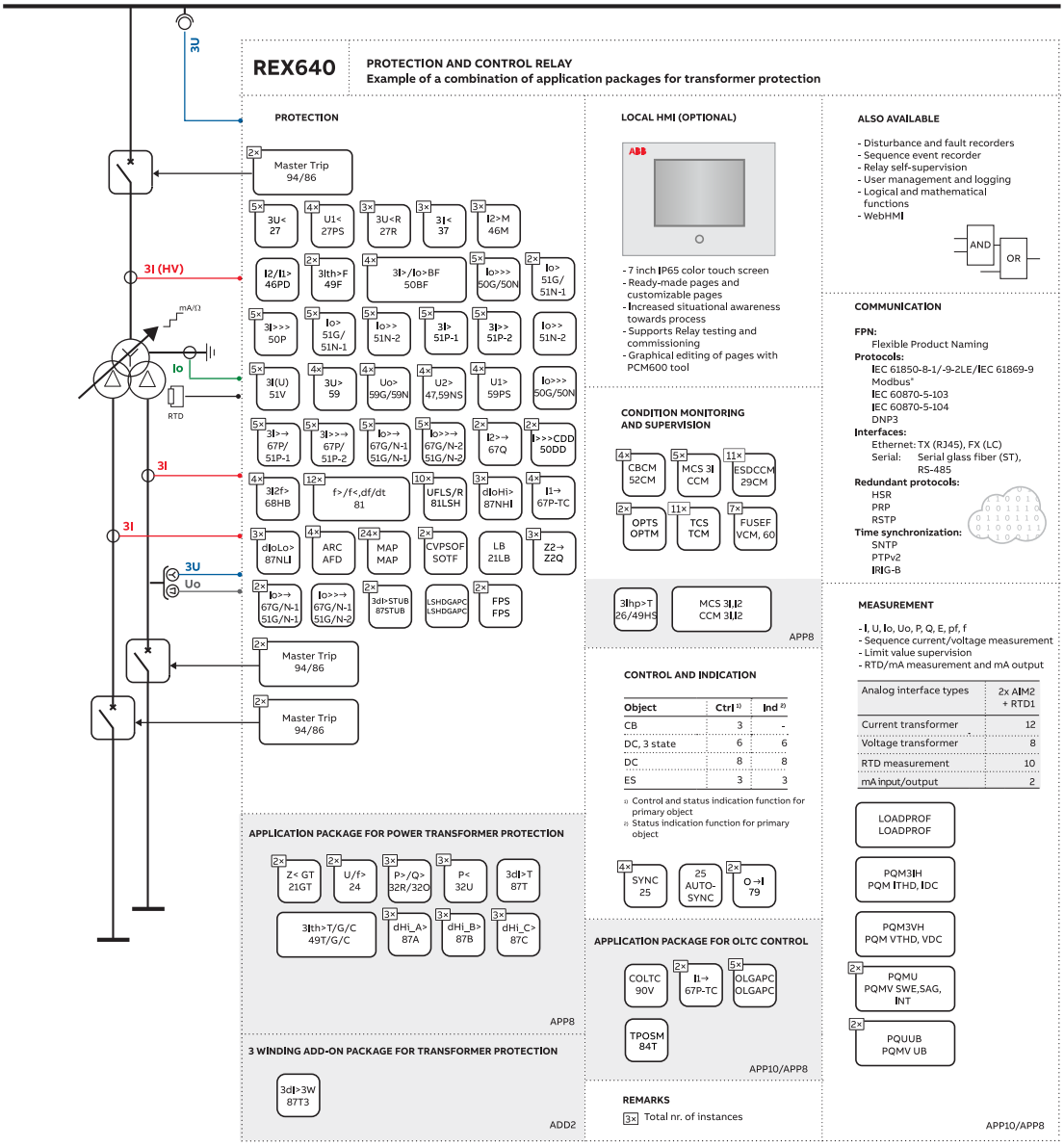

Figure 15: Transformer application

Figure 15 presents REX640 in a three-winding power transformer application. The base functionality is enhanced with a power transformer application package and the related three-winding add-on package. In the example case, REX640 also manages the on-load tap changer's manual and automatic control. For this purpose, the application package for OLTC control has been selected as well. Best match for current and voltage measurement can be managed by selecting two AIM2 cards for the relay. This combination offers 12 current and 8 voltage channels to be freely allocated for the relay functionalities. The OLTC control function requires information on the tap-changer's actual position. To be able to provide this information, the relay is equipped with an RTD card which can measure the OLTC position either as a resistance value or as an mA signal.

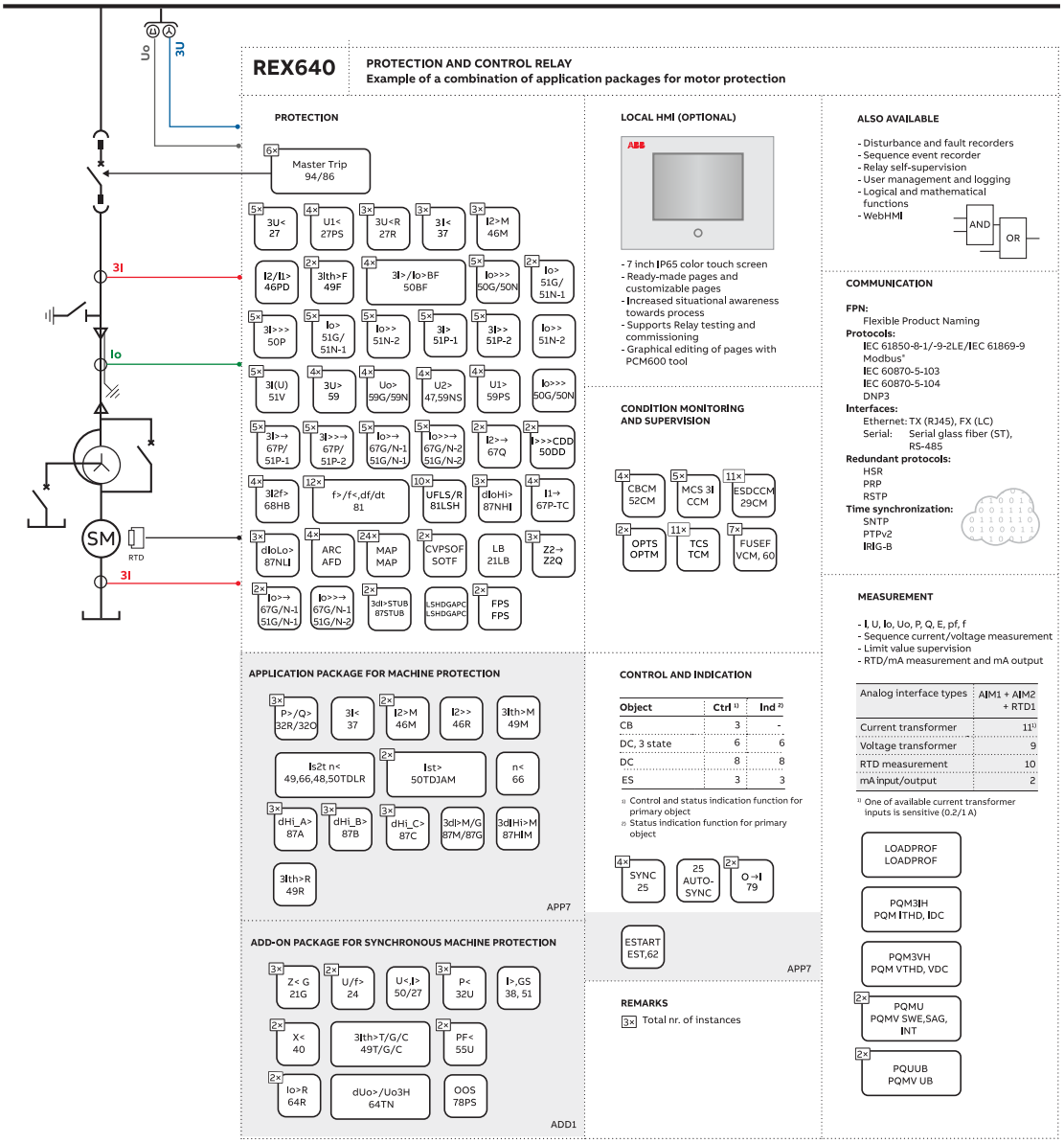

Figure 16: Motor application

Figure 16 presents REX640 in a synchronous motor application. The base functionality is enhanced with a machine protection application package and the related synchronous machine add-on package. Best match for current and voltage measurement can be managed by selecting both AIM1 and AIM2 cards for the relay. This combination offers 11 current and 9 voltage channels to be freely allocated for the relay functionalities. The stator winding temperatures are monitored via the temperature sensors in the motor. These sensors are connected to the RTD card within the relay.

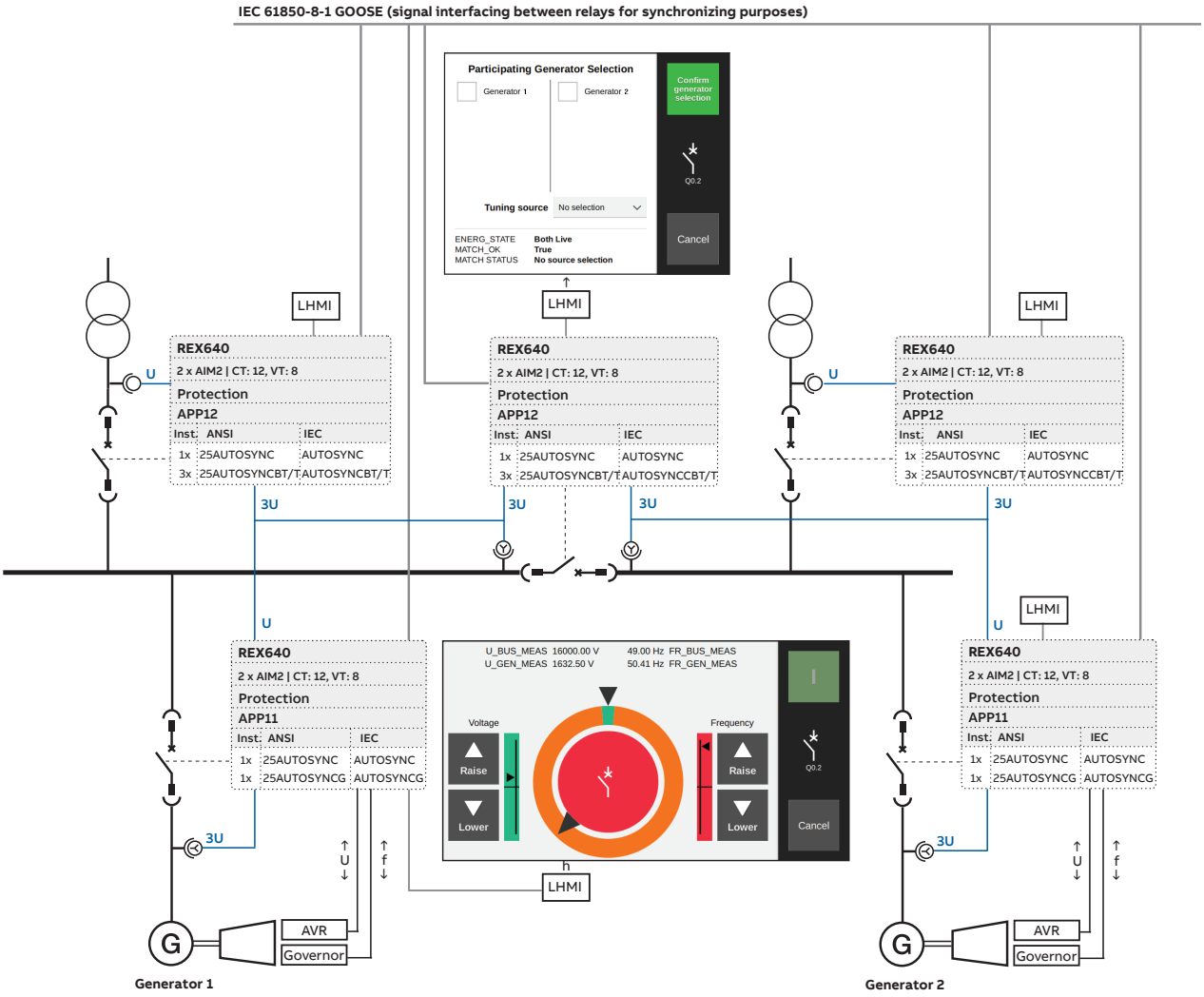

Figure 17: Autosynchronizer application

In addition to conventional protection, control, measurement and supervision duties, REX640 can perform both generator (APP11) and non-generator (APP12) circuit breaker synchronizing. Successful synchronization of two alternating power sources can be done by matching their voltage, frequency, phase sequence and phase angle. The circuit breaker (CB) connects the two sources after a period of CB closing time from the instant of a given close command. Hence, all the conditions of synchronization need to be met at the instant of CB close operation for successful synchronization.

Each REX640, being part of the overall synchronizing scheme, contains its own synchronizer function. When a generator CB is to be synchronized, the related REX640 controls the generator's voltage, frequency and angle difference by requesting the generator's AVR and prime mover's governor to change the set-points accordingly. The generator circuit breaker synchronizing does not require information exchange between other REX640 relays within the scheme.

When a non-generator CB is to be synchronized, all the REX640 relays within the scheme exchange information between themselves in order to identify suitable generator(s) for the voltage and frequency matching. Once the generators are identified and selected, the REX640 related to the circuit breaker to be synchronized sends a request to the selected generator(s) REX640 for the required voltage and frequency corrections. When the voltage, frequency and the angle difference across the CB under synchronization are within the set

limits, REX640 closes the circuit breaker. The information exchange between the REX640s takes place using IEC 61850-8-1 binary and analog GOOSE signaling over Ethernet.

The LHMI panels of REX640 can be used as local user interface for circuit breaker synchronization. The upper-level remote control systems like SCADA, DCS or PMS can interact with the synchronizing scheme using MMS or Modbus protocols. The REX640-based synchronizing scheme supports manual, semi-manual and automatic synchronizing modes.

When the synchronizing scheme includes both generator and non-generator CBs, the maximum size of the supported system is eight generator and 17 non-generator CBs.

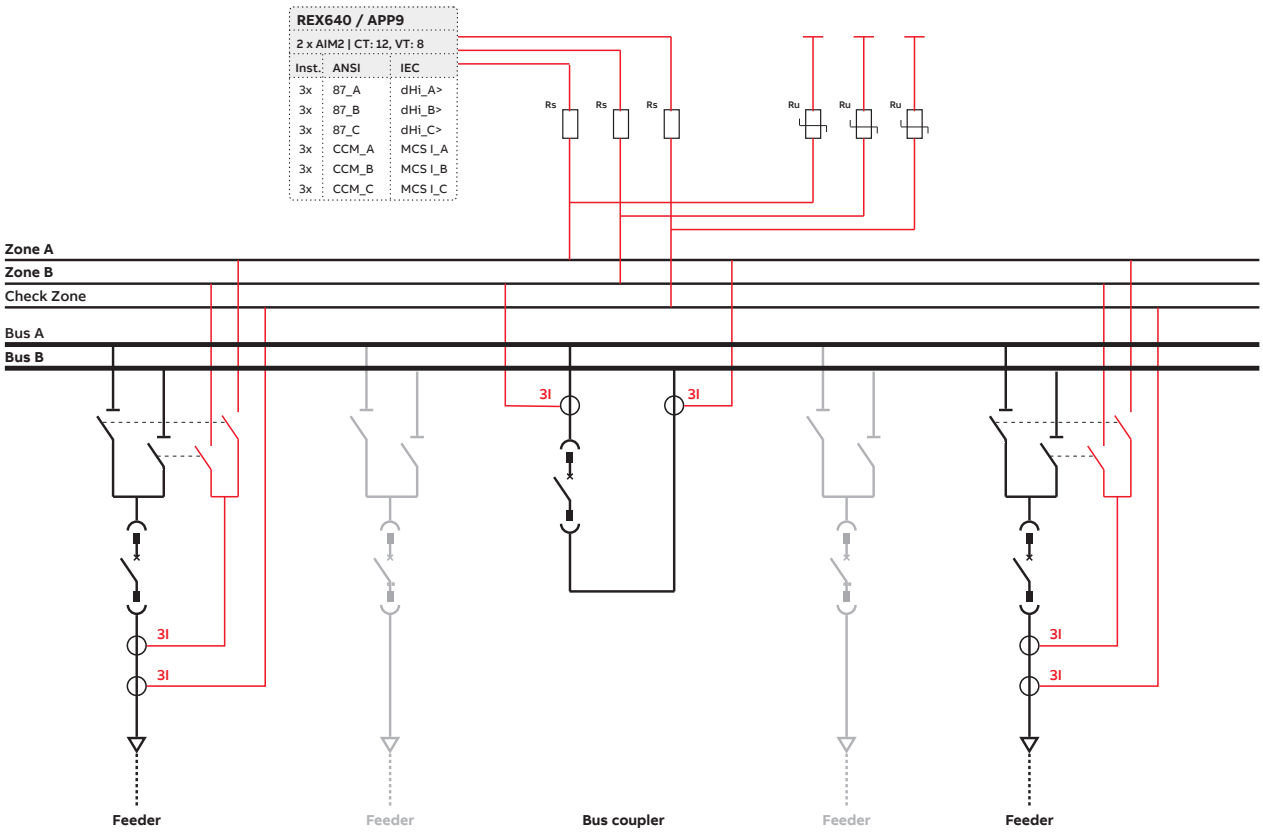

Figure 18: Busbar protection application

Figure 18 presents REX640 in a phase-dedicated highimpedance busbar protection application for a double busbar switchgear. The relay's base functionality is enhanced with the busbar protection application package (APP9). The two AIM2 cards in the relay provide a total of 12 current channels. In the example, 9 out of the 12 current channels are used to create three busbar protection zones. Zones A and B provide selective protection for Bus A and Bus B, respectively. The third zone, called check zone, covers both busbars. The check zone works as the final trip release condition for the selective zones; it provides security against false trip commands initiated by the selective zones, for example, due to a fault within the disconnector's auxiliary switch circuitry. The current transformers' secondary buswires for the three protection zones are supervised by dedicated functions within the relay.

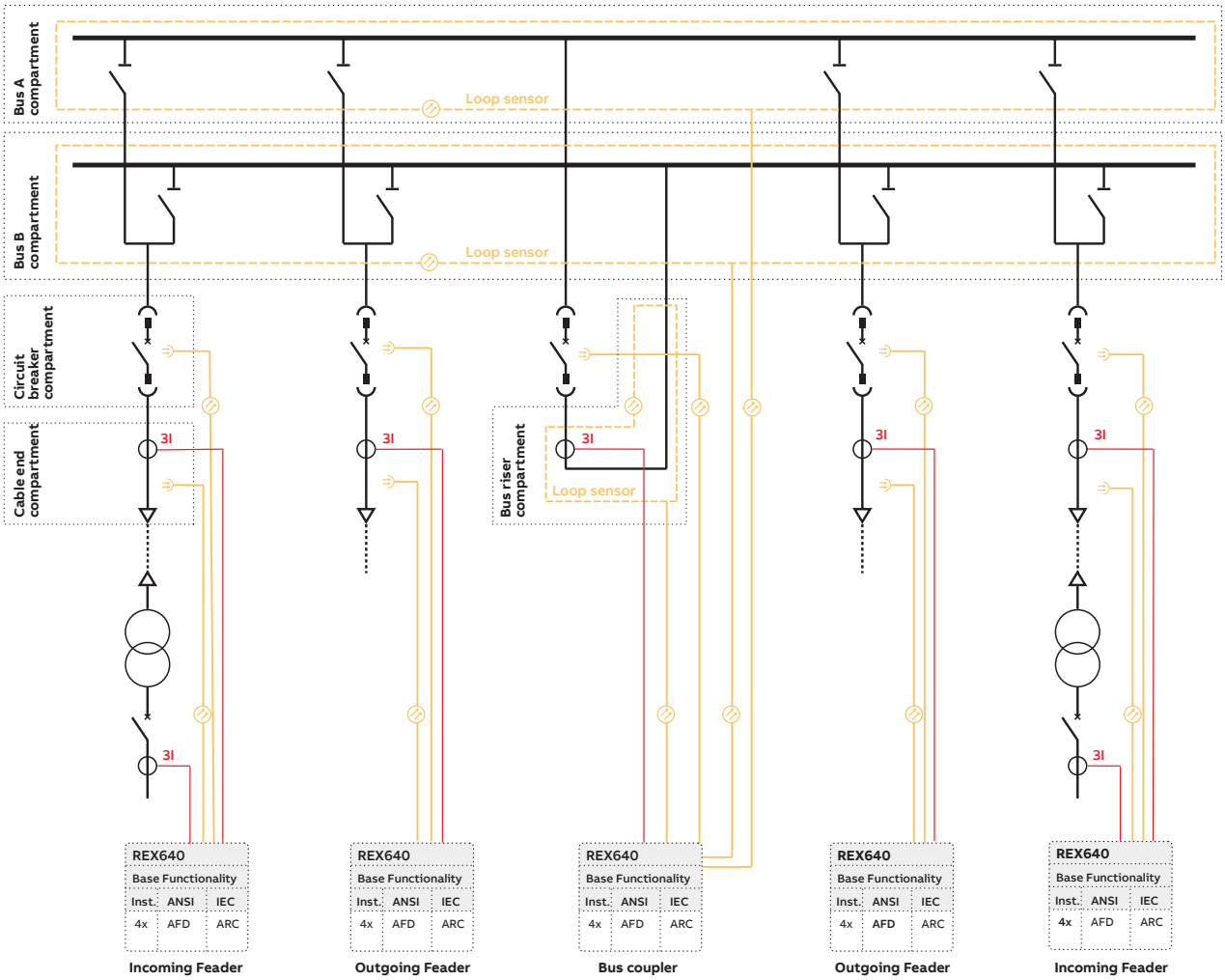

Figure 19: Arc flash protection application

Figure 19 presents an installation-wide arc flash protection scheme for a double busbar switchgear. REX640 protection relays are equipped with arc flash sensor card. The card supports a maximum of four pieces of either loop or lens sensors or a combination thereof. By using suitable sensor combinations for different bays, we can build up a selective arc flash protection scheme for the complete switchgear. The selective operation of the arc flash protection scheme limits the power outage caused by the arc fault to the smallest possible section of the switchgear. The arc flash protection operation is not dependent on light detection only; it is also supervised by arc fault current measurement. Since the arc flash protection operation should be as fast as possible, the use of static power outputs for tripping circuits is highly recommended. The functional condition of the arc flash sensor is continuously supervised and if a problem is detected, an alarm is triggered; this applies to both loop and lens sensors.

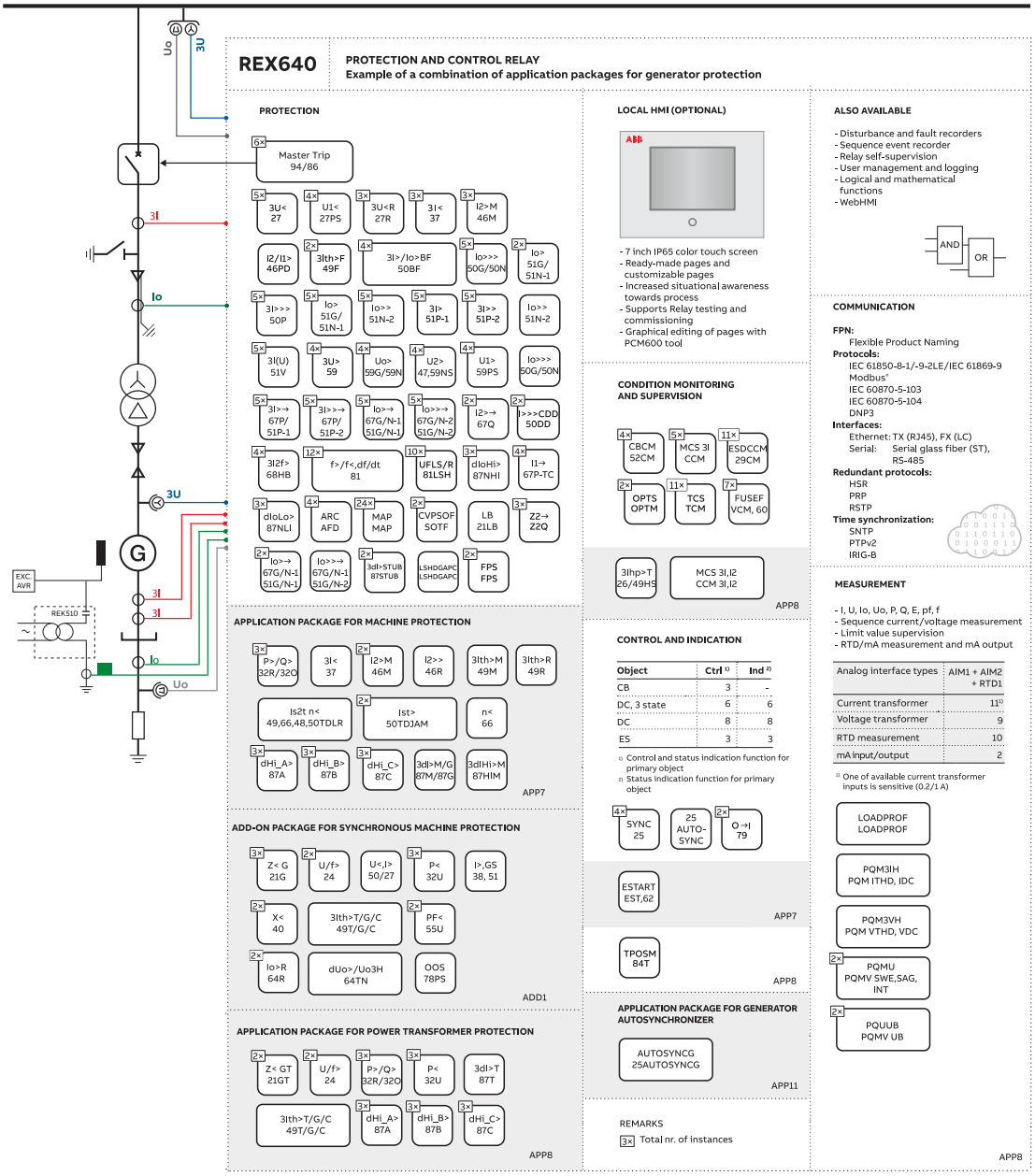

Figure 20: Generator application

Figure 20 presents REX640 in a synchronous generator application including a block transformer. The base functionality is enhanced with the machine protection and transformer protection application packages. The synchronous machine add-on package supports the related protection functions for a synchronous generator. Generator autosynchronizer application packages support the generator's synchronized connection into the busbars, in both manual and auto modes. The relay's LHMI works as the local operator interface for controlling the autosynchronizing sequence. An external injection device (REK 510) enables the generator's excitation circuit supervision against earth faults. Best match for current and voltage measurement needs can be managed by selecting both AIM1 and AIM2 cards for the relay. This combination offers 11 current and 9 voltage channels to be freely allocated to the functionalities in the relay. The generator's stator winding temperatures are monitored using RTD sensors.

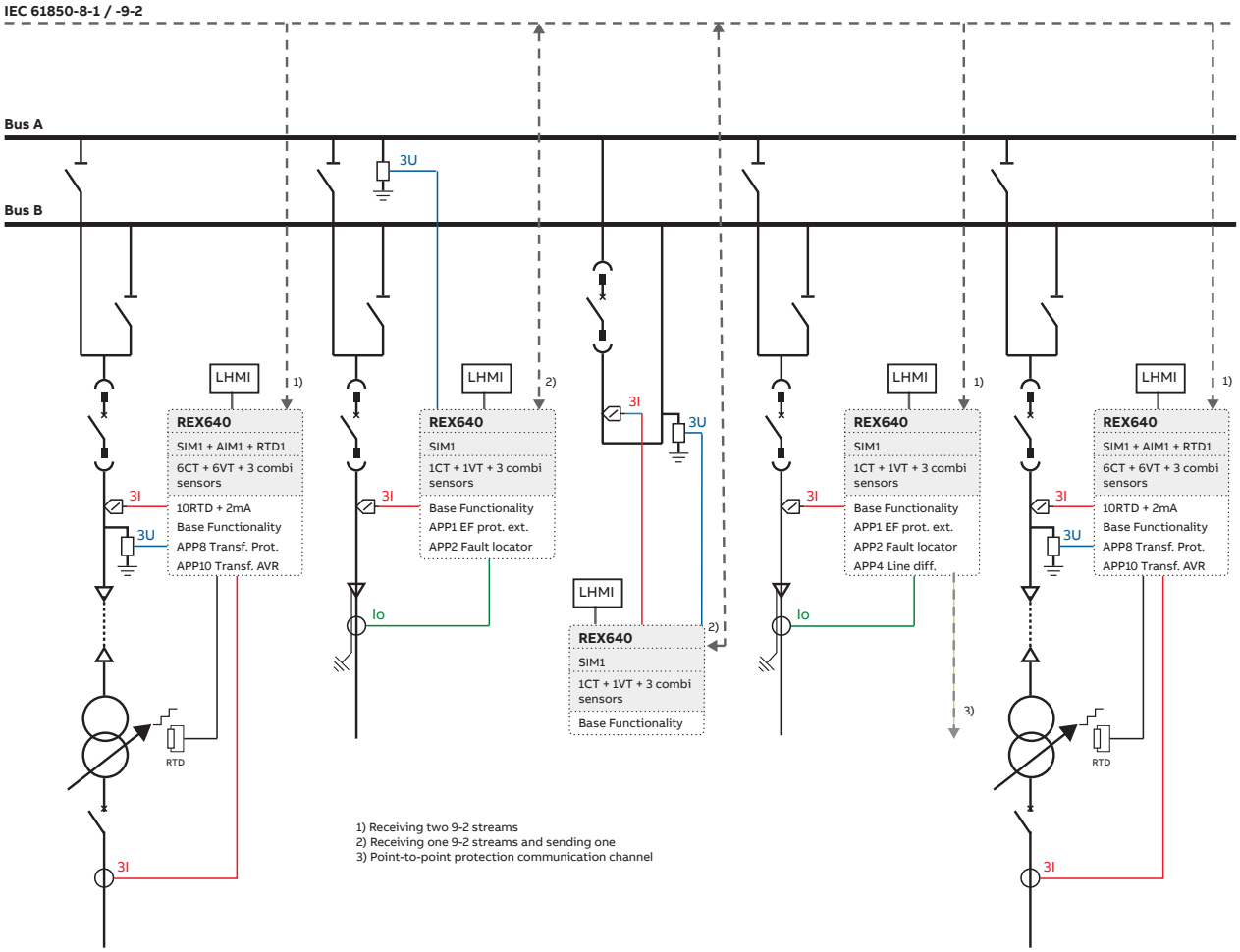

Figure 21: Digital switchgear application

REX640 is perfectly aligned with the needs of digital switchgear. Sensors are used for the local phase current and voltage measurements, apart from the high-voltage side current measurement used for power transformer protection, which is carried out by conventional current transformers. For the outgoing cable feeders, the earth-fault protection uses core balance current transformers. The Bus A voltage is measured by the relay in panel +J2, whereas the Bus B voltage is measured by the relay in panel +J3. Both relays send the measured bus voltages to the Ethernet bus as sampled measured values (SMV) according to IEC 61850-9-2 LE or IEC61869-9. Depending on the type of the feeder, it receives either one or two SMV streams. The feeders receiving two SMV streams automatically switch between the streams based on the position of the busbar disconnectors. All interlocking signals between the panels use binary GOOSE messaging according to IEC 61850-8-1. The incoming power transformer feeders measure also the cable side voltages to enable automatic voltage regulation (tap changer control) and synchronizing check functionality for circuit breaker closing.

8. Supported ABB solutions

The REX640 protection relay together with the ABB Ability Electrification Monitoring and Control ZEE600 constitutes a genuine IEC 61850 solution for reliable power distribution in utility and industrial power systems. To facilitate the system engineering, ABB's relays are supplied with connectivity packages. The connectivity packages include a compilation of software and relay-specific information, including single-line diagram templates and a full relay data model. The data model includes

event and parameter lists. With the connectivity packages, the relays can be readily configured using PCM600 and integrated with the ZEE600.

REX640 offers native support for IEC 61850 Edition 2.1 including binary and analog horizontal GOOSE messaging. In addition, a process bus enabling sending and receiving of sampled values of analog currents and voltages is supported.

Unlike the traditional hardwired, inter-device signaling, peer-to-peer communication over a switched Ethernet LAN offers an advanced and versatile platform for power system protection. Among the distinctive features of the protection system approach, enabled by the full implementation of the IEC 61850 substation automation standard, are fast communication capability, continuous supervision of the protection and communication system's integrity, and flexible reconfiguration and upgrades. This protection relay series is able to optimally use the interoperability provided by the IEC 61850 Edition 2.1 features.

At substation level, ZEE600 uses the data content of the bay level devices to enhance the substation level functionality.

ZEE600 features a Web browser-based HMI, which provides a customizable graphical display for visualizing single-line mimic diagrams for switchgear bay solutions. Substation devices and processes can also be remotely accessed through the Web HMI, which improves personnel safety.

In addition, ZEE600 can be used as a local data warehouse for the substation's technical documentation and for the network data collected by the devices. The collected network data facilitates extensive reporting and analyzing of network fault situations by using the data historian and event handling features of ZEE600. The historical data can be used for accurate monitoring of process and equipment performance, using calculations based on both real-time and historical values. A better understanding of the process dynamics is achieved by combining time-based process measurements with production and maintenance events.

ZEE600 can also function as a gateway and provide seamless connectivity between the substation devices and network-level control and management systems.

9. Control

REX640 integrates functionality for controlling objects such as circuit breakers, disconnectors, earthing switches, on-load tap changers and Petersen coils via the LHMI or by means of remote controls. The relay includes four circuit breaker control blocks. In addition, the relay features 14 disconnector control blocks intended for the motor-operated control of disconnectors or a circuit breaker truck and three control blocks intended for the motor-operated control of the earthing switch. Furthermore, the relay includes eight additional disconnector position indication blocks and three earthing switch position indication blocks that can be used with disconnectors and earthing switches that are only manually controlled.

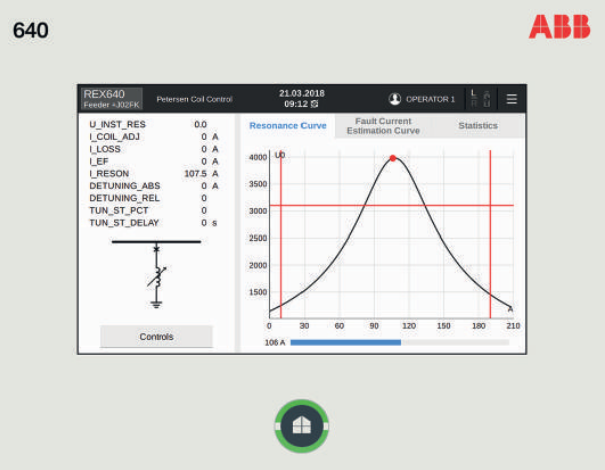

Figure 22: Petersen Coil control page

The touch screen LHMI supports a single-line diagram with control points and position indication for the relevant primary devices. Interlocking schemes required by the application are configured using Signal Matrix or Application Configuration in PCM600.

REX640 includes two autoreclosing functions, each with up to five programmable autoreclosing shots of desired type and duration. A load-shedding function performs load shedding based on underfrequency and the rate of change of the frequency.

To validate correct closing conditions for a circuit breaker, REX640 contains a synchrocheck function. For installations

including synchronous generators, REX640 introduces a synchronizer that actively controls the generator's voltage and frequency in order to reach a synchronous situation across the circuit breaker. The synchronizer functionality is available for a generator circuit breaker as well as for a nongenerator (network) circuit breaker. A complete installationwide synchronizing system can be built using the REX640 relays. The maximum size of the synchronizing system is eight generator breakers and 17 non-generator breakers.

Synchronization of a generator circuit breaker can be implemented using a single REX640 relay including the ASGCSYN function block. The relay interfaces the external measurement and control circuitry via hardwired binary and analog signals. The excitation and prime mover control signals are based on pulse commands, either with fixed or variable length. The synchronizer function block has three different function modes: manual, semi-automatic and automatic. In each of these modes, the LHMI acts as the local user interface. The LHMI includes the necessary command, indication and measurement features for each of the modes, thus rendering the conventional dedicated synchronizing panel unnecessary.

REX640 also supports systems in which non-generator circuit breakers are synchronized. The prerequisite is that all the feeders within the system are equipped with REX640 relays. The generator relays have to contain the ASGCSYN function block and all the non-generator relays need to contain the ASNSCSYN function block. In addition, all the REX640 relays have to contain the coordinator function block ASCGAPC. The role of ASCGAPC is to model the system primary circuit connection state to involve the correct generators for the synchronization of a non-generator breaker and to interact between the ASGCSYN and ASNSCSYN function blocks. The information exchange between ASCGAPC, ASGCSYN and ASNSCSYN is carried out via binary and analog GOOSE signalling as per IEC 61850-8-1. The LHMI dedicated to the relay (breaker) works as the local user interface for a nongenerator breaker synchronizing. The available synchronizing modes are "automatic" and "semi-automatic". A manual synchronization of the non-generator breaker can be carried out as a back-up solution in situations where the communication system (IEC 61850-8-1) is not available. This requires operator actions from two LHMIs, namely from the LHMI of the concerned non-generator breaker and the LHMI of the manually selected generator relay.

10. High-speed transfer device (HSTD)

REX640 can perform automatic high-speed transfer functionality utilizing APP51 or APP52 or APP53 application packages. In the industry the functionality is also referred as high-speed busbar transfer (HSBT), motor bus transfer (MBT), high-speed motor bus transfer (HSMBT) and automatic bus transfer (ABT).

The high-speed transfer is typically required in processes where the electrical supply for the critical system parts must be secured by connecting alternative (stand-by) feeder online. Such processes are typically be found in petrochemical, pharmaceutical, semiconductor manufacturing industries and in electrical power generation plants. Common feature for these examples is that there are motors fed by the switchgear, these motors will back-feed the busbar once the grid connection is lost. The declining busbar voltage and frequency must be considered carefully to determine the correct closing moment for the alternative feeder.

The supported transfer modes are:

- Fast transfer
- Transfer at first phase coincidence
- Residual voltage-based transfer
- Time delay-based transfer

The fast transfer mode can be further divided into simultaneous and sequential circuit breaker control schemes. Selection of the transfer mode takes place dynamically considering the set parameters and the prevailing network conditions. Typically, the fast transfer mode is the preferred one, but in case the network conditions do not allow this mode to be executed, the next one would be the first phase coincident mode followed by residual and time delayed modes.

The triggering of transfer functionality can happen internally in the REX640 by the HSABTC transfer function, or it can be based on external triggering signal, or it can be manually initiated.

In addition to necessary voltage measurements, the REX640 can be connected to measure main and alternative feeders phase currents. The current measurements are necessary only if the automatic circuit breaker travel time calculation is based on current measurement, instead of circuit breaker position information.

While engineering a REX640 based HSTD scheme, couple of hardware related performance issues must be considered to enable the fast transfer and transfer at first phase coincident operation modes. The static power output module(s) in REX640 must be used for circuit breaker controls within the scheme. The closing delay of the involved circuit breakers must be less than 100 ms.

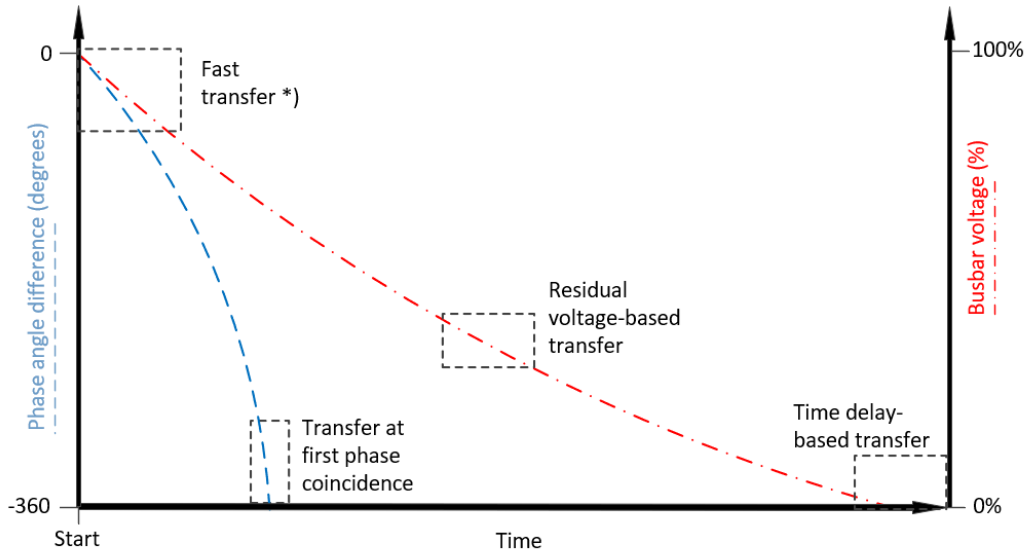

*) The fast transfer mode offers two circuit breaker control schemes; simultaneous and sequential (break-before-make).

Figure 23: Conceptual overview of transfer modes

Each of the APP51, APP52 and APP53 application packages support all the different transfer modes. The difference between the packages is in the number of actual transfer functions (HSABTC) instances, resulting higher scheme flexibility and increase in the number of supported circuit breakers.

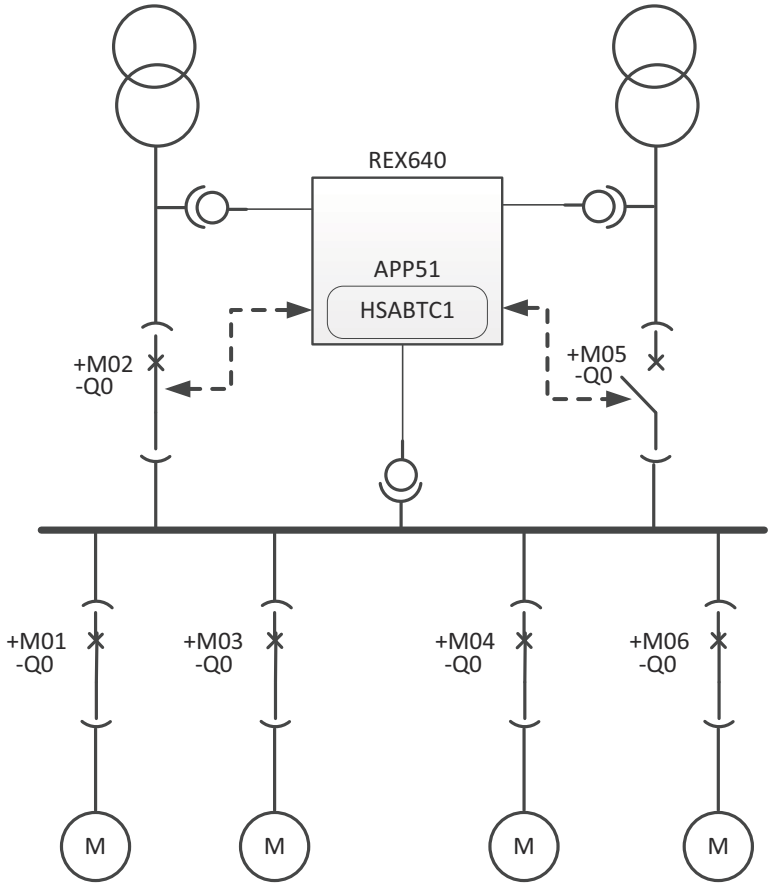

Figure 24: Example case in using APP51

In the above example the motor control switchgear is supplied by two incoming feeders +M02 and +M05. Under normal conditions the switchgear is supplied by +M02 feeder only, whereas the feeder +M05 works as the stand-by feeder. In case the HSTD functionality is triggered by supply disturbances in the +M02 feeder, the REX640 will automatically transfer the supply over to +M05 feeder. Once the +M02 feeder is available again, the transfer back to the original configuration can be initiated manually. Cases where the feeder +M05 works as the main feeder and the +M02 as the stand-by feeder, are supported as well.

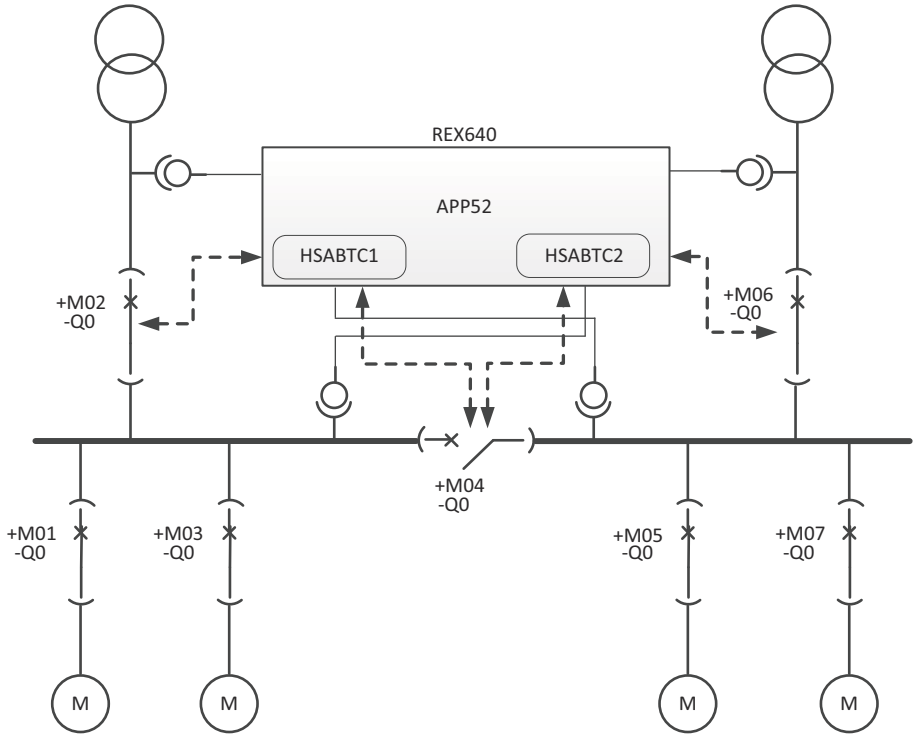

Figure 25: Example case in using APP52

In the above example the motor control switchgear is supplied by two incoming feeders +M02 and +M06. Under normal conditions both the incoming feeders are closed, while the bus-sectionalizer +M04 remains open. In case the HSTD functionality is triggered by supply disturbances in either of the incoming feeders, +M02 or +M06, the REX640 will automatically transfer the concerned bus-section supply to the healthy incoming feeder by closing the bus-sectionalizer +M04 circuit breaker. Once the failed incoming feeder is available again, the transfer back to the original configuration can be initiated manually.

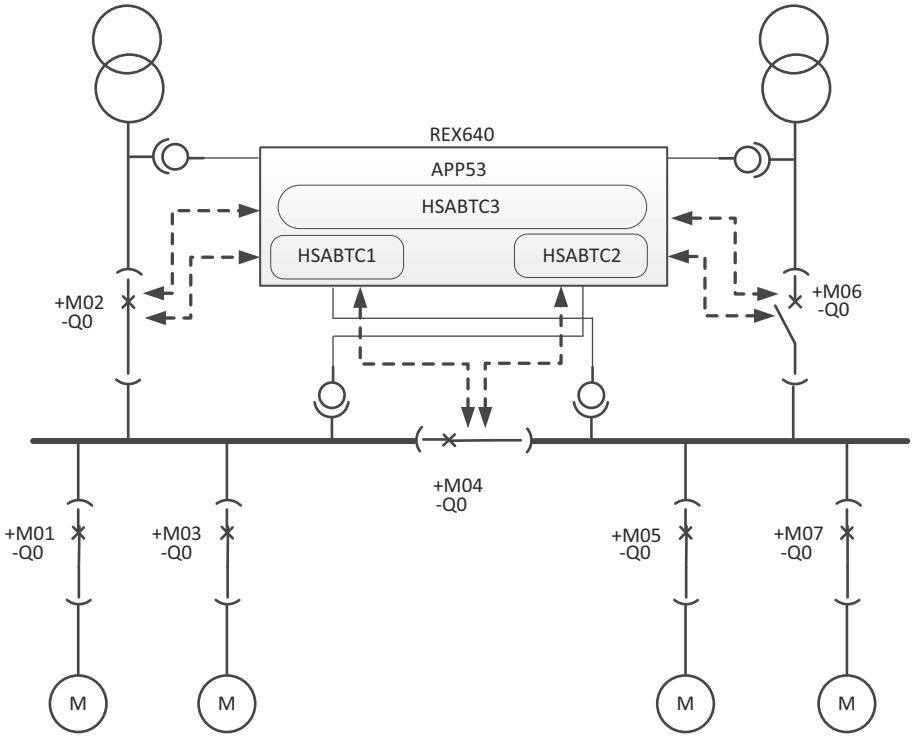

Figure 26: Example case in using APP53

The above example of utilizing APP53 application package is very similar to the earlier presented APP52 example case. However, the third instance of HSABTC function enables higher flexibility with the transfer scheme. Let us consider a situation where the switchgear is supplied by one incoming feeder, let's say +M02, and the bus-sectionalizer +M04 is closed. Let us further assume that the other incoming feeder +M06 is available, even though not closed. In case supply disturbances are recognized with the +M02 incoming feeder, the HSTD functionality resulting a transfer from +M02 incoming feeder to +M06 incoming feeder can be initiated. Manually triggered configuration changes between the incoming feeders and the bus-sectionalizer are fully supported.

11. Arc flash protection

The arc flash protection is available on the optional hardware module. The module supports connection of up to four sensors. The sensors can be of lens or loop types, or a free mixture. Both sensor types are supervised against sensor failure. Fast tripping increases staff safety and limits material damage, therefore it is recommended to use static power outputs (SPO) instead of normal power outputs (PO). This typically decreases the total operating time with 4..6 ms compared to the normal power outputs.

12. Power transformer differential protection

The relay offers low-impedance differential protection for two-winding (two restraints) and three-winding (three restraints) power transformers. The power transformer

protection application package includes the protection for a two-winding power transformer. If support for three-winding power transformer is needed, the corresponding protection add-on package can be selected. Both low-impedance differential functions feature three-phase multi-slope stabilized stages and an instantaneous stage to provide fast and selective protection against short circuits, winding interturn faults and bushing flash-overs. A second harmonic restraint with advanced waveform-based blocking ensures stability at transformer energization. The fifth harmonic based blocking and unblocking limits stabilize the protection performance in moderate overexcitation situations. In case of three-winding differential protection, the connection group phase shift matching can be done with 0.1 degree resolution supporting cycloconverter applications. If the tap-changer position information is available, it is possible to further increase the protection sensitivity by compensating the tap-changer position error within the measured differential current.

The power transformer protection application package also includes high-impedance differential functions for a phasesegregated protection scheme. If this scheme is applied, the related current transformers have to be correctly selected and the necessary secondary circuit components, external to the relay, defined.

13. Measurements

The base functionality of the REX640 relay contains a number of basic measurement functions for current, voltage, frequency, symmetrical components of currents and voltages, power, power factor and energy. These measurement functions can be freely connected to the measured secondary quantities available in the relay. The relay can also measure various analog signals via RTD and mA inputs. All these measurements can be used within the relay configuration for additional logics. The measurements are available locally on the HMI and can be accessed remotely via communication. The information is also accessible via WHMI.

The relay is also provided with a load profile recorder. The load profile feature stores the selected load measurement data captured periodically (demand interval). The records can be viewed on the LHMI and are available in COMTRADE format.

14. Power quality

In the EN standards, power quality is defined through the characteristics of the supply voltage. Transients, shortduration and long-duration voltage variations and unbalance and waveform distortions are the key characteristics describing power quality. The distortion monitoring functions are used for monitoring the current total demand distortion and the voltage total harmonic distortion.

Power quality monitoring is an essential service that utilities can provide for their industrial and key customers. A monitoring system can provide information about system disturbances and their possible causes. It can also detect problem conditions throughout the system before they cause customer complaints, equipment malfunctions and even equipment damage or failure. Power quality problems are not limited to the utility side of the system. In fact, the majority of power quality problems are localized within customer facilities. Thus, power quality monitoring is not only an effective customer service strategy but also a way to protect a utility's reputation for quality power and service.

The protection relay has the following power quality monitoring functions.

- Voltage variation
- Voltage unbalance
- Current harmonics
- Voltage harmonics

The voltage unbalance and voltage variation functions are used for measuring short-duration voltage variations and monitoring voltage unbalance conditions in power transmission and distribution networks.

The voltage and current harmonics functions provide a method for monitoring the power quality by means of the current waveform distortion and voltage waveform distortion. The functions provide selectable short-term 3- or 60- or 300–second sliding average and a long-term demand for total demand distortion (TDD) and total harmonic distortion (THD). The phase-specific harmonic content is measured for voltages and currents, as well

as DC component and fundamental content. The dedicated harmonics measurement page in the LHMI presents the measurements in a userfriendly manner.

15. Fault locator

The relay features an optional impedance-measuring fault location function suitable for locating short circuits in radial distribution systems. Earth faults can be located in effectively and low-resistance earthed networks, as well as in compensated networks. When the fault current magnitude is at least of the same order of magnitude or higher than the load current, earth faults can also be located in isolated neutral distribution networks. The fault location function identifies the type of the fault and then calculates the distance to the fault point. The calculations provide information on the fault resistance value and accuracy of the estimated distance to the fault point.

16. Disturbance recorder

The relay is provided with a powerful disturbance recorder featuring selectable sampling frequency 128/64/32 samples per a cycle and up to 24 analog and 64 binary signal channels. The analog channels can be set to record either the waveform or the trend of the currents and voltages measured.

The analog channels can be set to trigger the recording function when the measured value falls below or exceeds the set values. The binary signal channels can be set to start a recording either on the rising or the falling edge of the binary signal or on both.

The binary channels can be set to record external or internal relay signals, for example, the start or trip signals of the relay stages, or external blocking or control signals. The recorded information is stored in a nonvolatile memory in COMTRADE format IEEE Std C37.111-2013 and can be uploaded for subsequent fault analysis.

17. Event log

To collect sequence-of-events information, the relay has a nonvolatile memory capable of storing 1024 events with the associated time stamps. The event log facilitates detailed pre- and post-fault analyses of feeder faults and disturbances. The considerable capacity to process and store data and events in the relay supports the growing information demand of future network configurations.

The sequence-of-events information can be accessed either via the LHMI or remotely via the communication interface of the relay. The information can also be accessed locally or remotely using the Web HMI.

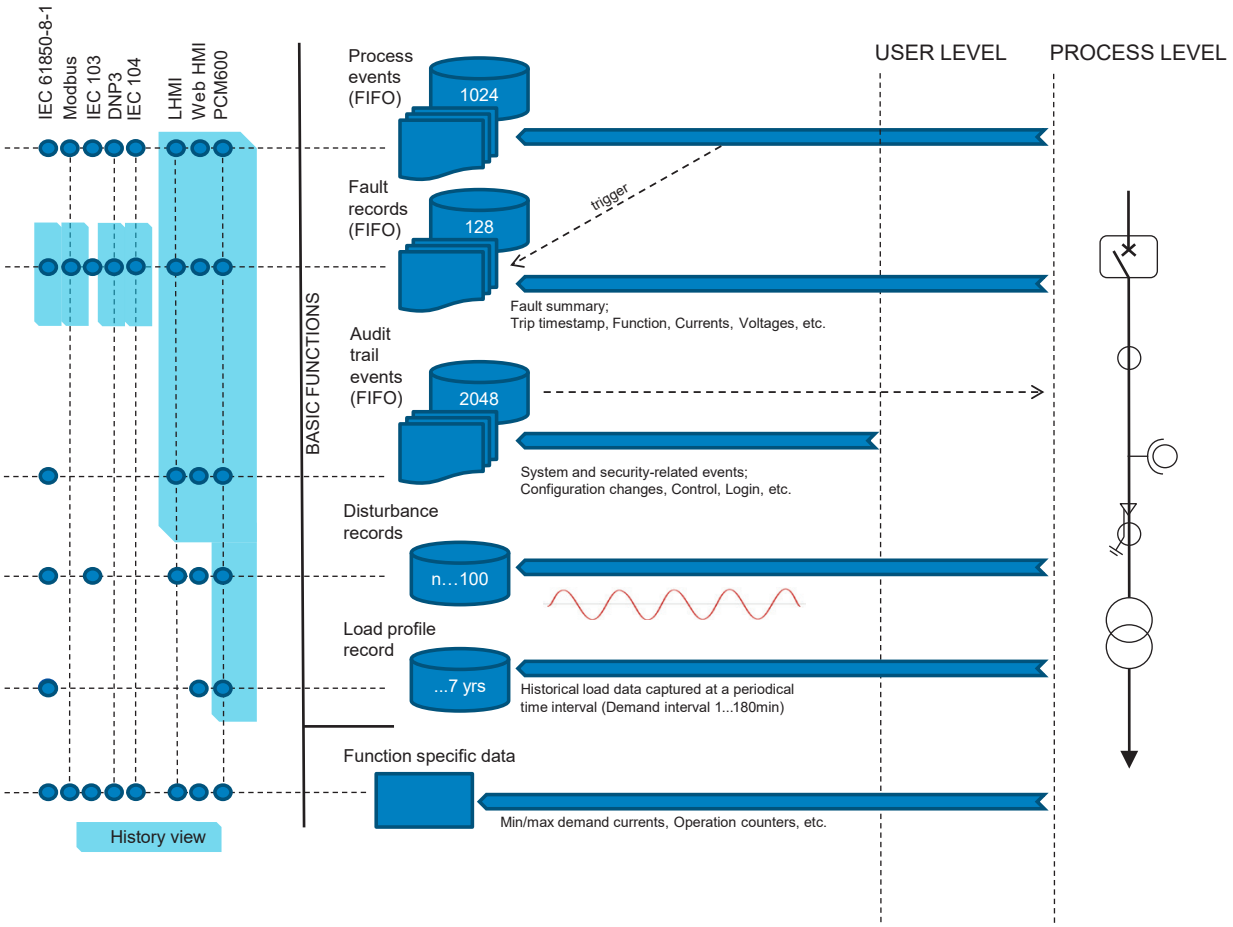

Figure 27: Event recording

18. Recorded data

The relay can store the records of the latest 128 fault events. The records can be used to analyze the power system events. Each record includes, for example, current, voltage and angle values and a time stamp. The fault recording can be triggered by the start or the trip signal of a protection block, or by both. The available measurement modes include DFT, RMS and peak-to-peak. Fault records store relay measurement values when any protection function starts. In addition, the maximum demand current with time stamp is separately recorded. The records are stored in the nonvolatile memory.

19. Load profile

The load profile recorder stores the historical load data captured periodically (demand interval). Up to 12 load quantities can be selected for recording and storing in the nonvolatile memory. The recordable quantities include currents, voltages, power and power factor values. The recording time depends on a settable demand interval parameter and the amount of quantities selected. The quantities' type and amount to be recorded are determined in the application configuration. The recorded quantities are stored in the COMTRADE format IEEE Std C37.111-1999.

20. Trip circuit supervision

The trip circuit supervision continuously monitors the availability and operability of the trip circuit. It provides opencircuit monitoring

both when the circuit breaker is in closed and in open position. It also detects loss of circuit-breaker control voltage.

21. Self-supervision

The relay's built-in self-supervision system continuously monitors the state of the relay hardware and the operation of the relay software. Any fault or malfunction detected is used for alerting the operator.

A permanent relay fault blocks the protection functions to prevent incorrect operation.

22. Access control and cyber security

Cyber security measures are implemented to secure safe operation of the protection and control function following international standard IEC 62443. The relay supports these measures with configuration hardening capabilities, encrypted communication, Ethernet filter and rate limiter, security event logging and user access control.Additionally, the integrity and authenticity of the software a relay runs are checked and verified before and during relay is running. Relay configuration files have integrity and authenticity checks. Secure boot checks relay firmware integrity when relay is started. Relay file system also has integrity checking. When relay firmware is updated, the firmware updates are done securely by the relay tool.

The relay supports role-based user authentication and authorization with individual user accounts as defined in IEC 62351-8. All user activity is logged as security events to an audit trail in a nonvolatile memory and sent as messages to the Syslog server according to IEC 62351-14. The nonvolatile memory does not need battery backup or regular component exchange to maintain the memory storage. File transfer and Web HMI use communication encryption protecting the data in transit. Also, the communication link between the relay configuration tool PCM600 and the relay is encrypted. All rear communication ports and optional protocol services can be activated according to the required system setup.

User accounts can be managed by PCM600 or centrally. A central account management is an authentication infrastructure that offers a secure solution for enforcing access control to relays and other systems within a substation. This incorporates management of user accounts, roles and certificates and the distribution of such, a procedure completely transparent to the user. The central server handling user accounts can be, for example, an Active Directory (AD) server such as Windows AD.

The relay supports full Public Key Infrastructure as defined by IEC 62351-9. With this, the user can ensure that the certificates used in secured communication are from a userapproved provider instead of device self-signed certificates.

Secure communication is supported for IEC 61850 MMS according to IEC 62351-3 TLS (Transport Layer Security). For protocols DNP3 and IEC 60870-5-104 according to IEC 62351-5.

With Virtual local area networks (VLAN) communication/information flow in a physical LAN network can be shared to several network segments. Sharing information/users to different segments improves information security. This also can improve communication network performance by sharing network traffic between different network devices.

23. Station communication

Operational information and controls are available through a wide range of communication protocols including IEC 61850 Edition 2.1, IEC 61850-9-2, IEC 60870-5-103, IEC 60870-5-104, Modbus® and DNP3. The Profibus DPV1 communication protocol is supported via the protocol converter SPA-ZC 302. Full communication capabilities, for example, horizontal communication and process bus communication between devices, are only enabled by IEC 61850.

The relay provides the possibility for a second IP address and a second subnetwork when the communication modules with three Ethernet ports (COM1901...1903) are used. However, only one IP network can be used as the default route. Using two IP addresses, communication networks can be separated based on the dominant user's needs. For example, one IP address can serve the dispatchers and the other one can serve the service engineers' needs.

In addition to the two physical network interfaces, the relay supports up to five VLAN interfaces, which operate as logical communication interfaces within Network1. VLAN interfaces can be used to segment traffic as needed into logically separated Ethernet networks.

Only one interface default route can be configured in the device. To support more complex communication architectures, the relay also allows configuration of up to 10 additional static routes, enabling traffic to be directed toward specific destination networks in addition to the interface default route.

The IEC 61850 protocol is a core part of the relay as the protection and control application is fully based on standard modelling. The relay supports Edition 2.1 and Edition 1 versions of the standard. With Edition 2.1 support, the relay has the latest functionality modelling for substation applications and the best interoperability for modern substations. The relay supports flexible product naming (FPN) facilitating the mapping of relay's IEC 61850 data model to a customer defined IEC 61850 data model.

The IEC 61850 communication implementation supports monitoring and control functions. Additionally, parameter settings, disturbance recordings and fault records can be accessed using the IEC 61850 protocol. Disturbance recordings are available to any Ethernet-based application in the standard COMTRADE file format. The relay supports simultaneous event reporting to five different clients on the station bus.

The relay can send binary and analog signals to other devices using the IEC 61850-8-1 GOOSE (Generic Object Oriented Substation Event) profile. Binary GOOSE messaging can, for example, be used for protection and interlocking-based protection schemes. The relay meets the GOOSE performance requirements for tripping applications in distribution substations, as defined by the IEC 61850 standard (class P1, <3 ms data exchange between the devices). The relay also supports the sending and receiving of analog values using GOOSE messaging. Analog GOOSE messaging enables easy transfer of analog measurement values over the station bus, thus facilitating, for example, the sending of measurement values between the relays when controlling transformers running in parallel.

The relay also supports IEC 61850 process bus concept by sending and receiving sampled values of currents and voltages. With this functionality long measurement transformer wirings can be reduced and galvanic interpanel wiring can be replaced with Ethernet communication. The analog values are transferred as sampled values using either IEC 61869-9 or IEC 61850-9-2 LE protocol. IEC 61869-9 process bus is according to combined measurement and protection profile with 4,8kHz sampling frequency. REX640 supports publishing of one and subscribing of four sampled value streams. The intended application for sampled values are current-based differential protection functions or sharing the voltage values with the relays that have voltage-based protection or supervision functions. The relay can receive up to four sampled value streams and totally 24 measurements can be connected into the protection relay application when using IEC 61869-9 or IEC 61850-9-2LE. Relay also can publish up to 24 analog channels (depending on hardware configuration) with IEC 61869-9. When publishing analog values via IEC 61850-9-2 LE, one published stream can contain max four currents and four voltages.

Relays with process bus based applications use IEEE 1588 edition 2 for high-accuracy time synchronization.

For redundant Ethernet communication in station bus, the relay offers either two optical or two galvanic Ethernet network interfaces. An optional third port with optical or galvanic Ethernet network interface is also available. The relay also provides an optional fiber-optic port for dedicated protection communication which can be used for up to 50 km distances depending on the selected fiber transceiver. The intended teleprotection applications for this port are line differential and line distance protection communication or binary signal transfer. The optional third Ethernet interface provides connectivity for any other Ethernet device to an IEC 61850 station bus inside a switchgear bay, for example connection of a remote I/O. Ethernet network redundancy can be achieved using the high-availability seamless redundancy (HSR) protocol or the parallel redundancy protocol (PRP), or with a self-healing ring using rapid spanning tree

protocol RSTP supported by relay. Ethernet redundancy can be applied to the Ethernet-based IEC 61850, IEC 60870-5-104, Modbus and DNP3 protocols.

The IEC 61850 standard specifies network redundancy which improves the system availability for the substation communication. The network redundancy is based on two complementary protocols defined in the IEC 62439-3 standard: PRP and HSR protocols. Both protocols are able to overcome a failure of a link or switch with a zero switchover time. In both protocols, each network node has two identical Ethernet ports dedicated for one network connection.

The protocols rely on the duplication of all transmitted information and provide a zero switchover time if the links or switches fail, thus fulfilling all the stringent real-time requirements of substation automation.

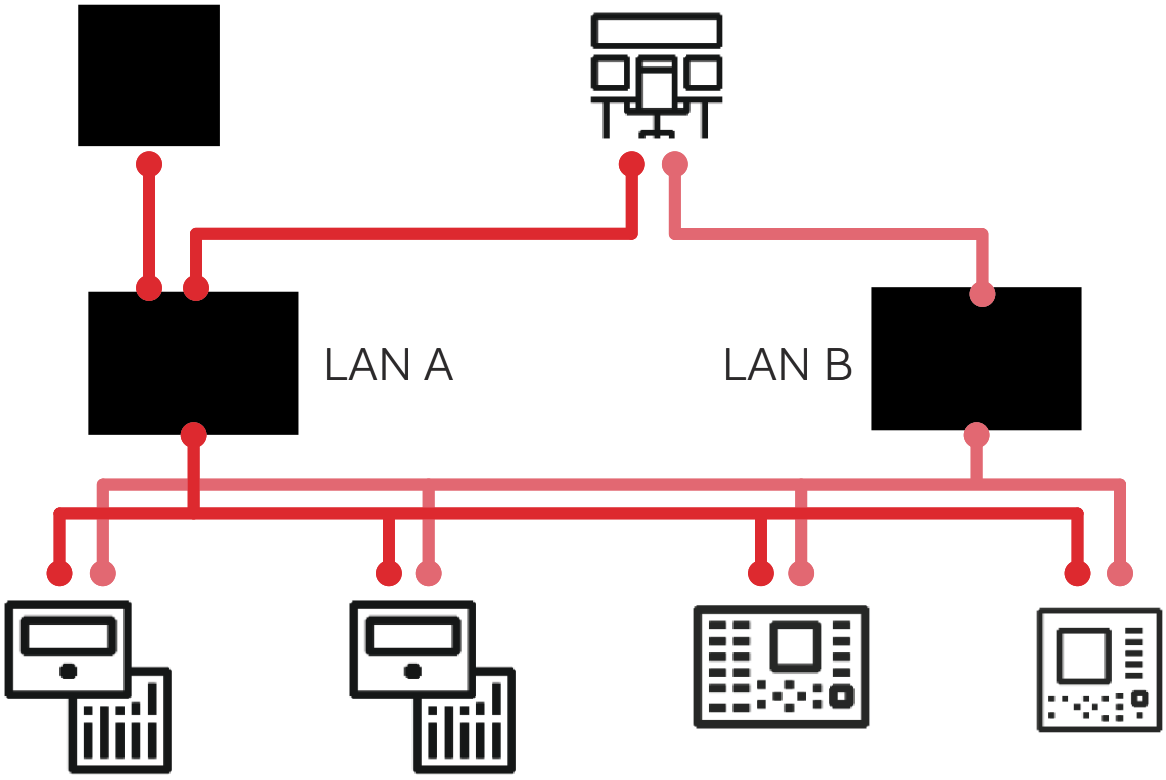

Figure 28: Parallel redundancy protocol (PRP) solution

In PRP, each network node is attached to two independent networks operated in parallel. The networks are completely separated to ensure failure independence and can have different topologies. As the networks operate in parallel, they provide zero-time recovery and continuous checking of redundancy to avoid failures.

HSR applies the PRP principle of parallel operation to a single ring. For each message sent, the node sends two frames, one through each port. Both frames circulate in opposite directions over the ring. Every node forwards the frames it receives from one port to another to reach the next node. When the originating sender node receives the frame it sent, the sender node discards the frame to avoid loops. The HSR ring supports the connection of up to 30 relays. If more than 30 relays are to be connected, it is recommended to split the network into several rings to guarantee the performance for real-time applications.

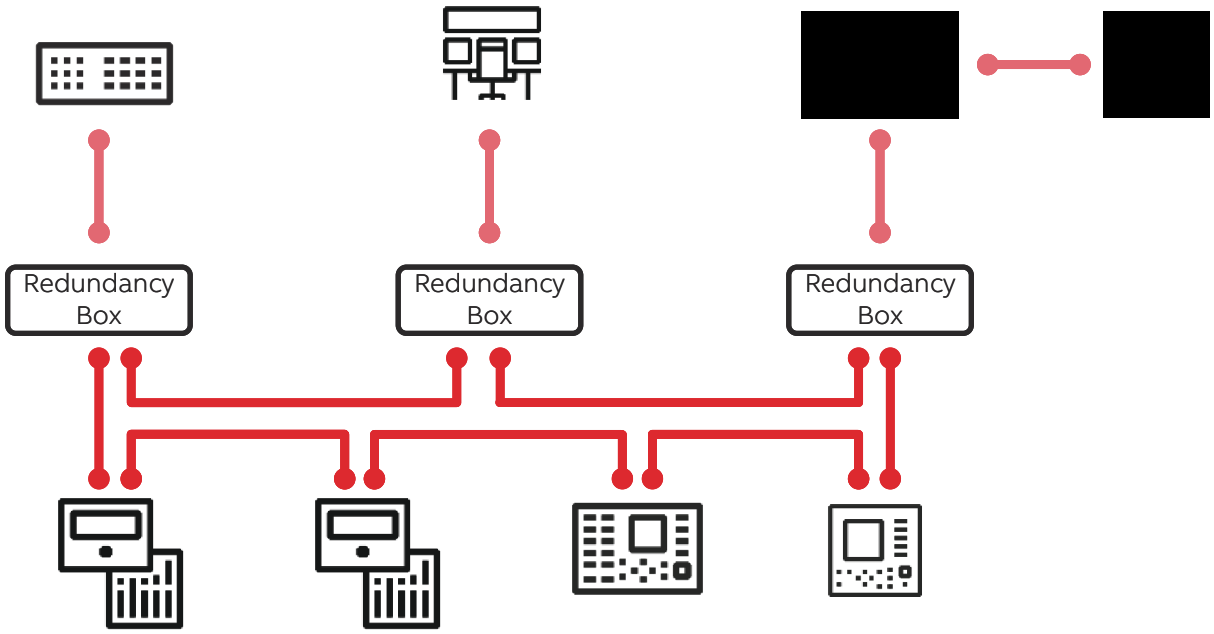

Figure 29: High-availability seamless redundancy (HSR) solution

The relay can be connected to Ethernet-based communication systems in a station bus using the RJ-45 connector (100Base-TX) or the multimode fiber optic LC connector (100Base-FX). A dedicated protection communication port uses a pluggable multimode or single mode fiber optic LC connector (100Base-FX). If connection to a serial bus is required, the RS-485 or fiber-optic serial communication ports can be used.

Modbus supports Modbus slave and master functionality. Modbus slave implementation supports RTU, ASCII and TCP modes. Besides standard Modbus functionality, the relay supports retrieval of time-stamped events, changing the active setting group and uploading of the latest fault records. If a Modbus TCP connection is used, five clients can be connected to the relay simultaneously. Further, Modbus serial and Modbus TCP can be used in parallel, and, if required, both IEC 61850 and Modbus can be run simultaneously. Modbus master implementation supports RTU with serial communication.

The IEC 60870-5-103 implementation supports two parallel serial bus connections to two different masters. Besides basic standard functionality, the relay supports changing of the active setting group and uploading of disturbance recordings in IEC 60870-5-103 format. Further, IEC 60870-5-103 can be used at the same time with the IEC 61850 protocol.

Table 3: Time synchronization methods supported by the relay

Methods	Time-stamping resolution
SNTP (Simple network time protocol) [2]	1 ms
IRIG-B (Inter-Range Instrumentation Group - Time Code Format B) [3]	4 µs
PTPv2 (IEEE 1588) with Power profile (IEEE Std C37.238-2011) and Utility profile (IEC 61850-9-3)	4 µs [4]

DNP3 IEC 60870-5-104 supports both serial and TCP mode for the connection of up to five masters. If required, both IEC 61850 and IEC 60870-5-104 can be run simultaneously.

The relay supports Profibus DPV1 with support of SPA-ZC 302 Profibus adapter. If Profibus is required, the relay must be ordered with Modbus serial options. Modbus implementation includes SPA protocol emulation functionality. This functionality enables connection to SPA-ZC 302.

When the relay uses the RS-485 bus for the serial communication, both two- and four-wire connections are supported. Termination and pull-up/down resistors can be configured with DIP switch on the communication card so that external resistors are not needed.

PTPv2 features:

- PTPv2 Power profile and PTPv2 Utility profile
- Receive (slave): 1-step/2-step
- Transmit (master): 1-step
- Layer 2 mapping
- Peer-to-peer delay calculation and monitoring
- Multicast operation
- Ordinary Clock with Best Master Clock algorithm
- One-step Transparent Clock for Ethernet ring topology
- Slave-only mode

The required accuracy of the grandmaster clock is +/-1 µs to guarantee performance of protection applications. The relay can work as a backup master clock per BMC algorithm if the external primary grandmaster clock is not available for short term.

In addition, the relay supports time synchronization via Modbus, DNP3 and IEC 60870-5-103 serial communication protocols.

Table 4: Supported station communication interfaces and protocols

	Ethernet		Serial	
Interfaces/Protocols	**100BASE-TX RJ-45**	**100BASE-FX LC**	**RS-485**	**Fiber optic ST**
IEC 61850-8-1	●	●	-	-
IEC 61869-9/IEC 61850-9-2 LE	●	●	-	-
MODBUS RTU/ASCII	-	-	●	●
MODBUS TCP/IP	●	●	-	-
DNP3 (serial)	-	-	●	●
DNP3 TCP/IP	●	●	-	-
IEC 60870-5-103	-	-	●	●

Table continues on the next page

[2] Ethernet-based
[3] With special time synchronization wiring
[4] Required especially in process bus applications

	Ethernet		Serial	
Interfaces/Protocols	100BASE-TX RJ-45	100BASE-FX LC	RS-485	Fiber optic ST
IEC 60870-5-104	●	●	-	-

● = Supported

24. Asset monitoring and management

SNMP (Simple Network Management Protocol) version 3 provides information for asset management tools. SNMP protocol can be used to monitor equipment information via TCP/IP communication network. When applied to monitor protection & control devices, target is to monitor equipment status, performance and possible issues. Information can be used e.g. for equipment inventory and asset management. Information like relay model, serial number, firmware version, parameter version etc. help to know installed base equipment current state and plan possible updates. Monitoring changes in firmware, parameters and configuration enhances cyber security by monitoring that no unintentional changes are done for relays.

25. Protection communication and supervision

The protection communication between the relays is enabled by means of a dedicated fiber optic communication channel; 1310 nm multimode or single-mode fibers with LC connectors are used. The communication link transfers analog and binary information between line ends for line differential, line distance and transfer trip functions. No external devices, such as GPS clocks, are needed for the line differential protection communication. Additionally, the link can be used to transfer any freely selectable binary data between line ends. In total, 16 binary signals can be transferred between two REX640 protection relays.

Each REX640 communication card variant contains an SFP rack for dedicated point-to-point protection communication via an SFP plug-in module. Three variants of SFP plug-in modules can be selected. The variants support optical communication for distances typically up to 2 km (multimode), 20 km (single-mode) and 50 km (single-mode). The SFP plugin unit can be ordered together with the relay or later on when the need to establish the link arises. The line differential protection can be realized between two REX640 relays or between REX640 and RED615/REX615 relays. If the line differential protection is to be realized between REX640 and RED615/REX615 relays, the SFP plug-in module has to match the RED615/REX615 communication card variant. Additionally, the RED615 relay version must be Ver.5.0 FP1 or later and phase current measurements should be realized with conventional current transformers that have 1 A as the nominal secondary current.

The protection communication supervision continuously monitors the protection communication link. The line differential protection function can be blocked if severe interference in the communication link, risking the correct operation of the function, is detected. If the interference persists, an alarm signal is triggered indicating permanent failure in the protection communication.

Communication module COM1903 gives the possibility to assign the third optical Ethernet communication port (interlink port) as an extra dedicated point-to-point protection communication channel. The second channel can transfer up to 16 additional binary signals between two REX640 relays, or alternatively eight additional binary signals between one REX640 and one RED615/REX615 relay. Analogue signals, needed for line differential protection, are transferred via the first protection communication channel only. This feature becomes handy in cases where REX640 relays are used in protection and control schemes for ring type RMU installations where a single REX640 must be able transfer binary signals to two different directions within the ring. Both protection communication channels are supervised.

26. Technical data

26.1 Dimensions of the relay

Table 5: Dimensions of the relay

Description		Value
Width (standard case)		304.0 mm (11.9685 in)
Width (narrow case)		212.4 mm (8.3622 in)
Height		264.8 mm (10.4252 in)
Depth	With compression type CT/VT connectors	242.2 mm (9.5354 in)
	With ring lug type CT/VT connectors	254.1 mm (10.0039 in)
	With grounding bar	274.0 mm (10.7874 in)
Weight box (standard case)		6.9...8.8 kg (15.2...19.4 lb)
Weight box (narrow case)		7.0 kg (15.4 lb)

26.2 Dimensions of the HMI

Table 6: Dimensions of the HMI

Description	Value
Width	212.5 mm (8.3661 in)
Height	177.5 mm (6.9882 in)
Depth	57.6 mm (2.2677 in)
Weight	1.6 kg (3.5 lb)
Display element size	Seven inches
Display element resolution	800 x 480 pixels

26.3 Power supply for the relay

Table 7: Power supply for the relay

Description	PSM1901	PSM1902	PSM1903
Nominal auxiliary voltage U_n	24, 30, 48, 60 V DC	100, 110, 120, 220, 240 V AC, 50 and 60 Hz	110, 125 V DC
		48, 60, 110, 125, 220, 250 V DC	

Table continues on the next page

Description	PSM1901	PSM1902	PSM1903
Maximum interruption time in the auxiliary DC voltage without resetting the relay	50 ms at U_n		
Auxiliary voltage variation	50...120% of U_n (12...72 V DC)	55...110% of U_n (55...264 V AC)	70...120% of U_n (77...150 V DC)
		80...120% of U_n (38.4...300 V DC)	
Start-up threshold	16 V DC (24 V DC × 67%)		77 V DC (110 V DC × 70%)
Burden of auxiliary voltage supply under quiescent (P_q)/ operating condition	DC <18.0 W (nominal)/<25.0 W (max.)	DC <26.0 W (nominal)/<31.0 W (max.) AC <51.0 VA, <26.0 W (nominal)/<63 VA, <31.0 W (max.)	DC <17.0 W (nominal)/<25.0 W (max.)
Ripple in the DC auxiliary voltage	Max 15% of the DC value (at frequency of 100 Hz)		
Fuse type	T8A/250 V	T4A/250 V	
Permissible frequency band	50/60Hz +-10%		

26.4 Power supply for the HMI

Table 8: Power supply for the HMI

Description	Value
Nominal auxiliary voltage U_n	100, 110, 120, 220, 240 V AC, 50 and 60 Hz
	24, 48, 60, 110, 125, 220, 250 V DC
Auxiliary voltage variation	38...110% of U_n (38...264 V AC)
	80...120% of U_n (19.2...300 V DC)
Start-up threshold	19.2 V DC (24 V DC × 80%)
Burden of auxiliary voltage supply under quiescent (Pq)/operating condition	DC <6.0 W (nominal)/<14.0 W (max.) AC <9.5 VA, <7.0 W (nominal) / <16.0 VA, <12.0 W (max.)
Ripple in the DC auxiliary voltage	Max 15% of the DC value (at frequency of 100 Hz)
Fuse type	T3.15A/250V

26.5 Energizing inputs

Table 9: Energizing inputs

Description		Value	
Rated frequency		50/60 Hz	
Current inputs	Rated current, I_n	0.2/1 A	1/5 A [5]
	Thermal withstand capability Continuously	4 A	20 A
	Thermal withstand capability For 1 s	100 A	500 A
	Dynamic current withstand Half-wave value	250 A	1250 A
	Input impedance	<100 mΩ	<20 mΩ
Voltage inputs	Rated voltage	57...240 V AC	
	Voltage withstand Continuous	288 V AC	
	Voltage withstand For 10 s	360 V AC	
	Burden at rated voltages 100V, 110V and 120V	<0.05VA	
	Burden at rated voltage > 120V	<0.20VA	

26.6 Energizing inputs (sensors)

Table 10: Table 9: Energizing Inputs (SIM1901)

Description		Value
Current sensor input	Rated current voltage	75 mV ... 9000 mV [6]
	Continuous voltage withstand	125 V
	Input impedance at 50/60Hz	2...3 MΩ [7]
Voltage sensor input	Rated secondary voltage	346 mV…1733 mV [8]
	Continuous voltage withstand	50 V
	Input impedance at 50/60Hz	3 MΩ

[5] Residual current and/or phase current
[6] Equals the current range of 40 … 4000 A with 80A, 3mV/Hz Rogowski
[7] Depending on the used nominal current (hardware gain)
[8] Covers 6 kV … 30 kV sensors with division ratio of 10 000:1. Secondary voltages 600mV/√3 … 3 V / √3. Range up to 2 x Rated.

Table 11: Energizing Inputs (SIM1902 and SIM1903)

Description		Value
Current sensor input	Rated current voltage	75 mV ... 9000 mV [9]
	Continuous voltage withstand	125 V
	Input impedance at 50/60Hz	2 MΩ
Voltage sensor input	Rated secondary voltage	346 mV…2339 mV [10]
	Continuous voltage withstand	50 V
	Input impedance at 50/60Hz	2 MΩ 50 pF

26.7 Binary inputs

Table 12: Binary inputs

Description	Value
Operating range	±20% of the rated voltage
Rated voltage	24...250 V DC
Current drain	1.6...1.9 mA
Power consumption	31.0...570.0 mW
Threshold voltage	16...176 V DC
Ripple in the DC auxiliary voltage	Max 15% of the DC value (at frequency of 100 Hz)
Wetting current	220 mA, impulse period 5ms 0…120 mA[11], impulse period 8ms

[9] Equals the current range of 40 … 4000 A with 80A, 3mV/Hz Rogowski
[10] Covers 6 kV … 40.5 kV sensors with division ratio of 10 000:1. Secondary voltages 600mV/√3 … 4.05V / √3. Range up to 2 x Rated.
[11] Adjustable only in RTD1902 module

26.8 RTD/mA inputs and mA outputs

Table 13: RTD/mA inputs and mA outputs

Description		Value	
RTD inputs	Supported RTD sensors	100 Ω platinum	TCR 0.00385 (DIN 43760)
		250 Ω platinum	TCR 0.00385
		100 Ω nickel	TCR 0.00618 (DIN 43760)
		120 Ω nickel	TCR 0.00618
		250 Ω nickel	TCR 0.00618
	Supported resistance range	0...4 kΩ	
	Maximum lead resistance (three-wire measurement)	100 Ω per lead	
	Isolation	2 kV (inputs to protective earth)	
	Response time	<1 s	
	RTD/resistance sensing current	<1 mA rms	
	Operation accuracy	Resistance	Temperature
		± 2.0% or ±1 Ω	±1°C
mA inputs	Supported current range	±0…20 mA	
	Current input impedance	44 Ω ±0.1%	
	Operation accuracy	±0.5% or ±0.01 mA	
mA outputs	Supported current range	±0…20 mA	
	Maximum loop impedance	700 Ω	
	Operation accuracy	±0.1 mA	

26.9 Signal outputs and IRF output

Table 14: Signal outputs and IRF output

Description	Value
Rated voltage	250 V AC/DC
Maximum continuous burden (resistive load, AC)	1250 VA
Continuous contact carry	5 A
Make and carry for 3.0 s	10 A
Make and carry 0.5 s	15 A
Breaking capacity when the control-circuit time constant L/R<40 ms, at 48/110/220 V DC	1 A/0.25 A/0.15 A
Minimum contact load	10 mA at 5 V AC/DC

26.10 Single-pole power output relays

Table 15: Single-pole power output relays

Description	Value
Rated voltage	250 V AC/DC
Maximum continuous burden (resistive load, AC)	2000 VA
Continuous contact carry	8 A
Make and carry for 3.0 s	15 A
Make and carry for 0.5 s	30 A
Breaking capacity when the control-circuit time constant L/R<40 ms, at 48/110/220 V DC	5 A/3 A/1 A
Minimum contact load	100 mA at 24 V AC/DC

26.11 Static signal output (SSO) relays

Table 16: Static signal output (SSO) relays

Description	Value
Rated voltage	250 V AC/DC
Maximum continuous burden (resistive load, AC)	250 VA
Continuous contact carry	1 A
Make and carry for 3.0 s	5 A
Breaking capacity when the control-circuit time constant L/R<40 ms, at 110 V DC	0.25 A
Minimum load current	1 mA
Maximum operation frequency at 50% duty cycle	10 Hz

26.12 Double-pole power output relays with TCS function

Table 17: Double-pole power output relays with TCS function

Description	Value
Rated voltage	250 V AC/DC
Maximum continuous burden (resistive load, AC)	2000 VA
Continuous contact carry	8 A
Make and carry for 3.0 s	15 A

Table continues on the next page

Description	Value
Make and carry for 0.5 s	30 A
Breaking capacity when the control-circuit time constant L/R<40 ms, at 48/110/220 V DC (two contacts connected in series)	5 A/3 A/1 A
Minimum contact load	100 mA at 24 V AC/DC
Trip-circuit supervision (TCS) Control voltage range	20...250 V AC/DC
Trip-circuit supervision (TCS) Current drain through the supervision circuit	~1.5 mA
Trip-circuit supervision (TCS) Minimum voltage over the TCS contact	20 V AC/DC (15...20 V)

26.13 Static power output (SPO) relays

Table 18: Static power output (SPO) relays

Description	Value
Rated voltage	250 VDC
Maximum continuous burden (resistive load, AC)	2000 VA
Continuous contact carry	5 A, 60 s 5 A continuous (one output active at a time per module) 1 A continuous (multiple outputs simultaneously active in the same module)
Make and carry for 0.2 s	30 A
Breaking capacity when the control-circuit time constant L/R<40 ms, at 48/110/220 V DC two contacts connected in series	16 A/6 A/3 A
Minimum load current	1 mA
Trip-circuit supervision (TCS) SP06 and SP08 Control voltage range	20...250 V DC
Trip-circuit supervision (TCS) SP06 and SP08 Current drain through the supervision circuit	~1.5 mA
Trip-circuit supervision (TCS) SP06 and SP08 Minimum voltage over the TCS contact	20 V DC
SP05 and SP07 Current drain through the circuit	~3 mA

26.14 Serial interface

Table 19: Serial interface

Type	Connector
Screw terminal X8	10-pin 2-row connector
Serial port X7	Optical ST-connector

26.15 USB interface, HMI

Table 20: USB interface, HMI

Type	Description
USB	Hi-Speed USB Type A

26.16 Ethernet interfaces (connectors X0, X1, X2 and X3)

Table 21: Ethernet interfaces (connectors X0, X1, X2 and X3)

Connector	Media	Reach [12]	Rate	Wavelength	Permitted path attenuation [13]
RJ-45	CAT 6 S/FTP	100 m	100 mbits/s	-	–
LC	MM 62.5/125 or 50/125 µm glass fiber core	2 km	100 mbits/s	1300 nm	<8 dB

[12] Maximum length depends on the cable attenuation and quality, the amount of splices and connectors in the path
[13] Maximum allowed attenuation caused by connectors and cable together

26.17 Protection communication link (connector X6)

Table 22: Protection communication link (connector X6)

Connector	Part number [14]	Fiber type	Reach [15]	Wavelength	Permitted path attenuation [16]
LC (SFP)	2RCA045621	MM 62.5/125 or 50/125 µm	2 km	1310 nm	<8 dB
LC (SFP)	2RCA045622	SM 9/125 µm	20 km	1310 nm	<13 dB
LC (SFP)	2RCA045623	SM 9/125 µm	50 km	1310 nm	<26 dB

26.18 IRIG-B (connector X8)

Table 23: IRIG-B (connector X8)

Description	Value
IRIG time code format	B004, B005 [17]
Isolation	500V 1 min
Modulation	Unmodulated
Logic level	5 V TTL
Current consumption	<1.0 mA
Power consumption	<0.5 W

26.19 Lens sensor and optical fiber for arc protection

Table 24: Lens sensor and optical fiber for arc protection

Description	Value
Normal service temperature range of the lens	-40...+100°C
Maximum service temperature range of the lens, max 1 h	+140°C
Minimum permissible bending radius of the connection fiber	100 mm
Arc sensor loop maximum attenuation	25dB

[14] Only these ABB verified SFP modules are supported in the protection communication link (port X6 in the communication module).
[15] Maximum length depends on the cable attenuation and quality, the amount of splices and connectors in the path
[16] Maximum allowed attenuation caused by connectors and cable together
[17] According to the 200-04 IRIG standard

26.20 Degree of protection of the protection relay

Table 25: Degree of protection of the protection relay

Description	Value
Front/connector side	IP 20 (with ring-lug signal connectors IP 00 or IP 10 depending on wiring)
Top and bottom	IP 30
Rear	IP 40

26.21 Degree of protection of the HMI

Table 26: Degree of protection of the HMI

Description	Value
Front	IP 54
Other sides	IP 20

26.22 Environmental conditions

Table 27: Environmental conditions

Description	Value
Operating temperature range	-25...+55ºC (continuous)
Short-time service temperature range	-40...+85ºC (<16 h) [18, 19]
Relative humidity	Up to 95%, non-condensing
Atmospheric pressure	86...106 kPa
Altitude	Up to 2000 m
Transport and storage temperature range	-40...+85ºC

[18] Degradation in MTBF and HMI performance outside the temperature range of -25...+55 ºC
[19] For relays with an LC communication interface the maximum operating temperature is +70 ºC

26.23 Electromagnetic compatibility tests

Table 28: Electromagnetic compatibility tests

Description	Type test value	Reference
1 MHz/100 kHz burst disturbance test Common mode	2.5 kV	IEC 61000-4-18 IEC 60255-26 IEEE C37.90.1-2012
1 MHz/100 kHz burst disturbance test Differential mode	2.5 kV	
3 MHz, 10 MHz and 30 MHz burst disturbance test Common mode	2.5 kV	IEC 61000-4-18 IEC 60255-26
Electrostatic discharge test Contact discharge	8 kV	IEC 61000-4-2 IEC 60255-26 IEEE C37.90.3-2001
Electrostatic discharge test Air discharge	15 kV	
Radio frequency interference test	10 V (rms) f = 150 kHz...80 MHz 10 V/m (rms) f = 80...2700 MHz 20 V/m (rms) f = 80...1000 MHz	IEC 61000-4-6 IEC 60255-26 IEC 61000-4-3 IEC 60255-26 IEEE C37.90.2-2004
Fast transient disturbance test Communication	2 kV	IEC 61000-4-4 IEC 60255-26 IEEE C37.90.1-2012
Fast transient disturbance test Other ports	4 kV	
Surge immunity test Communication	1 kV, line-to-earth	IEC 61000-4-5 IEC 60255-26
Surge immunity test Other ports	4 kV, line-to-earth 2 kV, line-to-line	
Power frequency (50 Hz) magnetic field immunity test Continuous	300 A/m	IEC 61000-4-8 IEC 60255-26
Power frequency (50 Hz) magnetic field immunity test 1...3 s	1000 A/m	
Pulse magnetic field immunity test	1000 A/m 8/20 µs	IEC 61000-4-9
Damped oscillatory magnetic field immunity test 2 s	100 A/m	IEC 61000-4-10

Table continues on the next page

Description	Type test value	Reference
Damped oscillatory magnetic field immunity test 1 MHz	400 transients/s	
Voltage dips and short interruptions	0%/50 ms Criterion A 40%/200 ms Criterion C 70%/500 ms Criterion C 0%/5000 ms Criterion C	IEC 61000-4-11 IEC 61000-4-29 IEC 60255-26
Power frequency immunity test Common mode	Binary inputs only 300 V rms	IEC 61000-4-16 IEC 60255-26, class A
Power frequency immunity test Differential mode	Binary inputs only 150 V rms	
Emission tests Conducted 0.15...0.50 MHz	<79 dB (µV) quasi peak <66 dB (µV) average	IEC 60255-26 CISPR 11 CISPR 32
Emission tests Conducted 0.5...30 MHz	<73 dB (µV) quasi peak <60 dB (µV) average	
Emission tests Radiated 30...230 MHz	<40 dB (µV/m) quasi peak, measured at 10 m distance	
Emission tests Radiated 230...1000 MHz	<47 dB (µV/m) quasi peak, measured at 10 m distance	
Emission tests Radiated 1…3 GHz	<76 dB (µV/m) peak <56 dB (µV/m) average, measured at 3 m distance	
Emission tests Radiated 3…6 GHz	<80 dB (µV/m) peak <60 dB (µV/m) average, measured at 3 m distance	

26.24 Safety-related tests

Table 29: Safety-related tests

Description	Type test value	Reference
Overvoltage category	III	IEC 60255-27
Pollution degree	2	IEC 60255-27
Insulation class	Class I	IEC 60255-27

Table continues on the next page

Description	Type test value	Reference
Dielectric tests	1.5 kV, 50 Hz, 1 min, Ethernet RJ-45	IEEE Std 802.3
	500 V, 50 Hz, 1 min, Ethernet RJ-45, RS-485 and IRIG-B 820 V, 50 Hz, 1 min, mA inputs / mA outputs of RTD1902, sensor inputs of SIM1902 / SIM1903 1 kV, 50 Hz, 1 min, across open contacts 2 kV, 50 Hz, 1 min, all other isolated circuits	IEC 60255-27
Impulse voltage test	1 kV, 1.2/50 µs, 0.5 J, RS-485 and IRIG-B 1.5 kV, 1.2/50 µs, 0.5 J, mA inputs / mA outputs of RTD1902, sensor inputs of SIM1902 / SIM1903 2.4 kV, 1.2/50 µs, 0.5 J, Ethernet RJ-45 5 kV, 1.2/50 µs, 0.5 J, all other isolated circuits	EC 60255-27
Insulation resistance measurements	>100 MΩ, 500 V DC	IEC 60255-27
Protective bonding resistance	<0.1 Ω, 4 A, 60 s	IEC 60255-27
Maximum temperature of parts and materials	Tested	IEC 60255-27
Flammability of insulating materials, components and fire enclosures	Evaluated / Tested	IEC 60255-27
Single-fault condition	Tested	IEC 60255-27
Resistance to mechanical stress test	IK 06 (HMI)	IEC 60255-27

26.25 Mechanical tests

Table 30: Mechanical tests

Description	Requirement	Reference
Vibration tests (sinusoidal)	Class 2	IEC 60068-2-6 (test Fc) IEC 60255-21-1
Shock and bump test	Class 2	IEC 60068-2-27 (test Ea shock) IEC 60068-2-29 (test Eb bump) IEC 60255-21-2
Seismic test	Class 2	IEC 60255-21-3

26.26 Environmental tests

Table 31: Environmental tests

Description	Type test value	Reference
Dry heat test	• 96 h at +55°C • 16 h at +85°C [20]	IEC 60068-2-2
Dry cold test	• 96 h at -25°C • 16 h at -40°C	IEC 60068-2-1
Damp heat test	• 6 cycles (12 h + 12 h) at +25…+55°C, humidity >93%	IEC 60068-2-30
Change of temperature test	• 5 cycles (3 h + 3 h) at -25...+55°C	IEC60068-2-14
Storage test	• 96 h at -40°C • 96 h at +85°C	IEC 60068-2-1 IEC 60068-2-2
Damp heat steady state	10 days at +40°C, humidity 93%	IEC 60255-1 IEC 60068-2-78

26.27 Product safety

Table 32: Product safety

Description	Reference
LV directive	2014/35/EU
Standard	EN 60255-27 (2014) EN 60255-1 (2009)
UL listed (E-file: E225502)	UL508

26.28 EMC compliance

Table 33: EMC compliance

Description	Reference
EMC directive	2014/30/EU
Standard	EN 60255-26 (2013)

[20] For relays with an LC communication interface the maximum operating temperature is +70°C

26.29 RoHS compliance

Table 34: RoHS compliance

Description
Complies with RoHS Directive 2011/65/EU

26.30 Protection functions

26.30.1 Distance protection (DSTPDIS)

Table 35: Distance protection (DSTPDIS)

Characteristic	Value
Operation accuracy	At the frequency f = f_n
	Current: ±1.5% of the set value or ±0.002 × I_n Voltage: ±1.5% of the set value or ±0.002 × U_n Impedance: ±2.5% of the set value or ±0.05 Ω Phase angle: ±2°
Shortest operate time [21] SIR [22]: 0.1...50	19 ms
Transient overreach SIR = 0.1...50	<8.5%
Reset time	Typically 45 ms
Reset ratio	Typically 0.96/1.04
Operate time accuracy	±1.0% of the set value or ±20 ms

[21] Tested according to IEC 60255-121 Long line model, SIR = 0.2. Measured with static power output (SPO)
[22] SIR = Source impedance ratio

26.30.2 Distance protection (DSTPDIS) main settings

Table 36: Distance protection (DSTPDIS) main settings

Parameter	Function	Value (Range)	Step
Phase Sel mode GFC	DSTPDIS	1 = Overcurrent 2 = Vol Dep Overcur 3 = Under impedance 4 = OC AND Und impedance	-
EF detection Mod GFC	DSTPDIS	1 = Io 2 = Io OR Uo 3 = Io AND Uo 4 = Io AND IoRef	-
Operate delay GFC	DSTPDIS	100...60000 ms	10
Z Chr Mod Ph Sel GFC	DSTPDIS	1 = Quadrilateral 2 = Mho (circular)	-
Directional mode Zn1	DSTPDIS	2 = Forward 3 = Reverse 1 = Non-directional	-
R1 zone 1	DSTPDIS	0.00...3000.00 Ω	0.01
X1 zone 1	DSTPDIS	0.00...3000.00 Ω	0.01
X1 reverse zone 1	DSTPDIS	0.00...3000.00 Ω	0.01
Z1 zone 1	DSTPDIS	0.01...3000.00 Ω	0.01
Z1 angle zone 1	DSTPDIS	15.0...90.0°	0.1
Z1 reverse zone 1	DSTPDIS	0.00...3000.00 Ω	0.01
PP operate delay Zn1	DSTPDIS	20...60000 ms	1
R0 zone 1	DSTPDIS	0.00...3000.00 Ω	0.01
X0 zone 1	DSTPDIS	0.00...3000.00 Ω	0.01
Factor K0 zone 1	DSTPDIS	0.00…5.00	0.01
Factor K0 angle Zn1	DSTPDIS	-179...180°	1
Gnd operate Dl Zn1	DSTPDIS	20...60000 ms	1
Directional mode Zn2	DSTPDIS	1 = Non-directional 2 = Forward 3 = Reverse	-

Table continues on the next page

Parameter	Function	Value (Range)	Step
R1 zone 2	DSTPDIS	0.00...3000.00 Ω	0.01
X1 zone 2	DSTPDIS	0.00...3000.00 Ω	0.01
X1 reverse zone 2	DSTPDIS	0.00...3000.00 Ω	0.01
Z1 zone 2	DSTPDIS	0.01...3000.00 Ω	0.01
Z1 angle zone 2	DSTPDIS	15.0...90.0°	0.1
Z1 reverse zone 2	DSTPDIS	0.00...3000.00 Ω	0.01
PP Op delay Mod Zn2	DSTPDIS	20...60000 ms	1
R0 zone 2	DSTPDIS	0.00...3000.00 Ω	0.01
X0 zone 2	DSTPDIS	0.00...3000.00 Ω	0.01
Factor K0 zone 2	DSTPDIS	0.00…5.00	0.01
Factor K0 angle Zn2	DSTPDIS	-179...180°	1
Gnd operate Dl Zn2	DSTPDIS	20...60000 ms	1
Directional mode Zn3	DSTPDIS	1 = Non-directional 2 = Forward 3 = Reverse	-
R1 zone 3	DSTPDIS	0.00...3000.00 Ω	0.01
X1 zone 3	DSTPDIS	0.00...3000.00 Ω	0.01
X1 reverse zone 3	DSTPDIS	0.00...3000.00 Ω	0.01
Z1 zone 3	DSTPDIS	0.01...3000.00 Ω	0.01
Z1 angle zone 3	DSTPDIS	15.0...90.0°	0.1
Z1 reverse zone 3	DSTPDIS	0.00...3000.00 Ω	0.01
PP operate delay Zn3	DSTPDIS	20...60000 ms	1
R0 zone 3	DSTPDIS	0.00...3000.00 Ω	0.01
X0 zone 3	DSTPDIS	0.00...3000.00 Ω	0.01
Factor K0 zone 3	DSTPDIS	0.00…5.00	0.01
Factor K0 angle Zn3	DSTPDIS	-179...180°	1
Gnd operate Dl Zn3	DSTPDIS	20...60000 ms	1

Table continues on the next page

Parameter	Function	Value (Range)	Step
Directional mode Zn4	DSTPDIS	1 = Non-directional 2 = Forward 3 = Reverse	-
R1 zone 4	DSTPDIS	0.00...3000.00 Ω	0.01
X1 zone 4	DSTPDIS	0.00...3000.00 Ω	0.01
X1 reverse zone 4	DSTPDIS	0.00...3000.00 Ω	0.01
Z1 zone 4	DSTPDIS	0.01...3000.00 Ω	0.01
Z1 angle zone 4	DSTPDIS	15.0...90.0°	0.1
Z1 reverse zone 4	DSTPDIS	0.00...3000.00 Ω	0.01
PP operate delay Zn4	DSTPDIS	20...60000 ms	1
R0 zone 4	DSTPDIS	0.00...3000.00 Ω	0.01
X0 zone 4	DSTPDIS	0.00...3000.00 Ω	0.01
Factor K0 zone 4	DSTPDIS	0.00…5.00	0.01
Factor K0 angle Zn4	DSTPDIS	-179...180°	1
Gnd operate Dl Zn4	DSTPDIS	20...60000 ms	1
Directional mode Zn5	DSTPDIS	1 = Non-directional 2 = Forward 3 = Reverse	-
R1 zone 5	DSTPDIS	0.00...3000.00 Ω	0.01
X1 zone 5	DSTPDIS	0.00...3000.00 Ω	0.01
X1 reverse zone 5	DSTPDIS	0.00...3000.00 Ω	0.01
Z1 zone 5	DSTPDIS	0.01...3000.00 Ω	0.01
Z1 angle zone 5	DSTPDIS	15.0...90.0°	0.1
Z1 reverse zone 5	DSTPDIS	0.00...3000.00 Ω	0.01
PP operate delay Zn5	DSTPDIS	20...60000 ms	1
R0 zone 5	DSTPDIS	0.00...3000.00 Ω	0.01
X0 zone 5	DSTPDIS	0.00...3000.00 Ω	0.01
Factor K0 zone 5	DSTPDIS	0.00…5.00	0.01
Factor K0 angle Zn5	DSTPDIS	-179...180°	1

Table continues on the next page

Parameter	Function	Value (Range)	Step
Gnd operate Dl Zn5	DSTPDIS	20...60000 ms	1
Select active zones	DSTPDIS	1 = Zone 1 2 = Zones 1-2 3 = Zones 1-3 4 = Zones 1-4 5 = All 5 zones	-

26.30.3 Local acceleration logic (DSTPLAL)

Table 37: Local acceleration logic (DSTPLAL)

Characteristic	Value
Operation accuracy	At the frequency f = f_n
	±1.5% of the set value or ±0.002 × I_n
Operate time accuracy	±1.0% of the set value or ±20 ms
Suppression of harmonics	DFT: -50 dB at f = n × f_n, where n = 2, 3, 4, 5,…

26.30.4 Local acceleration logic (DSTPLAL) main settings

Table 38: Local acceleration logic (DSTPLAL) main settings

Parameter	Function	Value (Range)	Step
Load current value	DSTPLAL	0.01...1.00 × I_n	0.01
Minimum current	DSTPLAL	0.01...1.00 × I_n	0.01
Load release off Tm	DSTPLAL	0...60000 ms	10
Minimum current time	DSTPLAL	0...60000 ms	10
Operation mode	DSTPLAL	1 = Zone extension 2 = Loss of load 3 = Both	-
Load release on time	DSTPLAL	0...60000 ms	10

26.30.5 Scheme communication logic (DSOCPSCH)

Table 39: Scheme communication logic (DSOCPSCH)

Characteristic	Value
Operate time accuracy	±1.0% of the set value or ±20 ms

26.30.6 Scheme communication logic (DSOCPSCH) main settings

Table 40: Scheme communication logic (DSOCPSCH) main settings

Parameter	Function	Value (Range)	Step
Scheme type	DSOCPSCH	1 = None 2 = Intertrip 3 = Permissive Underreach 4 = Permissive Overreach 5 = Blocking	-
Carrier Min Dur	DSOCPSCH	0...60000 ms	1
Coordination Time	DSOCPSCH	0...60000 ms	1

26.30.7 Phase segregated scheme communication logic (SPDSOCPSCH)

Table 41: Phase segregated scheme communication logic (SPDSOCPSCH)

Characteristic	Value
Operation accuracy	±1 % of the theoretical value or ±20 ms

26.30.8 Phase segregated scheme communication logic (SPDSOCPSCH) main settings

Table 42: Phase segregated scheme communication logic (SPDSOCPSCH) main settings

Parameter	Function	Value (Range)	Step
Scheme type	SPDSOCPSCH	1 = None 2 = Intertrip 3 = Permissive Underreach 4 = Permissive Overreach 5 = Blocking	-
Carrier Min Dur	SPDSOCPSCH	0...60000 ms	1
Coordination Time	SPDSOCPSCH	0...60000 ms	1

26.30.9 Current reversal and weak-end infeed logic (CRWPSCH)

Table 43: Current reversal and weak-end infeed logic (CRWPSCH)

Characteristic	Value
Operation accuracy	At the frequency f = f_n ±1.5% of the set value or ±0.002 × U_n
Operate time accuracy	±1.0% of the set value or ±20 ms

26.30.10 Current reversal and weak-end infeed logic (CRWPSCH) main settings

Table 44: Current reversal and weak-end infeed logic (CRWPSCH) main settings

Parameter	Function	Value (Range)	Step
Reversal mode	CRWPSCH	1 = Off 2 = On	-
Wei mode	CRWPSCH	1 = Off 3 = Echo 4 = Echo and Operate	-
PhV level for Wei	CRWPSCH	0.10...0.90 × U_n	0.01
PPV level for Wei	CRWPSCH	0.10...0.90 × U_n	0.01
Reversal time	CRWPSCH	0...60000 ms	10
Reversal reset time	CRWPSCH	0...60000 ms	10
Wei Crd time	CRWPSCH	0...60000 ms	10

26.30.11 Communication logic for residual overcurrent (RESCPSCH)

Table 45: Communication logic for residual overcurrent (RESCPSCH)

Characteristic	Value
Operate time accuracy	±1.0% of the set value or ±20 ms

26.30.12 Communication logic for residual overcurrent (RESCPSCH) main settings

Table 46: Communication logic for residual overcurrent (RESCPSCH) main settings

Parameter	Function	Value (Range)	Step
Scheme type	RESCPSCH	1 = None 2 = Intertrip 3 = Permissive Underreach 4 = Permissive Overreach 5 = Blocking	-
Carrier Min Dur	RESCPSCH	0...60000 ms	1
Coordination time	RESCPSCH	0...60000 ms	1

26.30.13 Phase segregated current reversal and weak-end infeed logic (SPCRWPSCH)

Table 47: Phase segregated current reversal and weak-end infeed logic (SPCRWPSCH)

Characteristic	Value
Operation accuracy	Depending on the frequency of the measured current: f_n ±2 Hz
	Voltage measurement: ±1.5% of the set value or ±0.002 x U_n
Operate time accuracy	±1 % of the theoretical value or ±20 ms

26.30.14 Phase segregated current reversal and weak-end infeed logic (SPCRWPSCH) main settings

Table 48: Phase segregated current reversal and weak-end infeed logic (SPCRWPSCH) main settings

Parameter	Function	Value (Range)	Step
Reversal mode	SPCRWPSCH	1 = Off 2 = On	-
Wei mode	SPCRWPSCH	1 = Off 3 = Echo 4 = Echo and Operate	-
PhV level for Wei	SPCRWPSCH	0.10...0.90 × U_n	0.01
PPV level for Wei	SPCRWPSCH	0.10...0.90 × U_n	0.01
Reversal time	SPCRWPSCH	0...60000 ms	10
Reversal reset time	SPCRWPSCH	0...60000 ms	10
Wei Crd time	SPCRWPSCH	0...60000 ms	10

26.30.15 Current reversal and weak-end infeed logic for residual overcurrent (RCRWPSCH)

Table 49: Current reversal and weak-end infeed logic for residual overcurrent (RCRWPSCH)

Characteristic	Value
Operation accuracy	At the frequency f = f_n ±1.5% of the set value or ±0.002 × I_n
Operate time accuracy	±1.0% of the set value or ±20 ms

26.30.16 Current reversal and weak-end infeed logic for residual overcurrent (RCRWPSCH) main settings

Table 50: Current reversal and weak-end infeed logic for residual overcurrent (RCRWPSCH) main settings

Parameter	Function	Value (Range)	Step
Reversal mode	RCRWPSCH	1 = Off 2 = On	-
Wei mode	RCRWPSCH	1 = Off 3 = Echo 4 = Echo and Operate	-
Residual voltage Val	RCRWPSCH	0.05...0.70 × U_n	0.01
Reversal time	RCRWPSCH	0...60000 ms	10
Reversal reset time	RCRWPSCH	0...60000 ms	10
Wei Crd time	RCRWPSCH	0...60000 ms	10

26.30.17 Line differential protection with in-zone power transformer (LNPLDF)

Table 51: Line differential protection with in-zone power transformer (LNPLDF)

Characteristics		Value		
Operation accuracy [23]		Depending on the frequency of the measured current: f_n ±2 Hz		
		Low stage	±2.5% of the set value	
		High stage	±2.5% of the set value	
High stage, operate time [24, 25]		Minimum	Typical	Maximum
	Differential current = 2 x *High operate value*	20 ms	23 ms	27 ms
	Differential current = 10 x *High operate value*	12 ms	15 ms	20 ms
Reset time		Typically 40 ms		
Reset ratio		Typically 0.96		
Retardation time		<40 ms		
Operate time accuracy in definite time mode		±1.0% of the set value or ±20 ms		

Table continues on the next page

[23] With the symmetrical communication channel (as when using dedicated fiber optic).
[24] Without additional delay in the communication channel (as when using dedicated fiber optic).
[25] Measured with static power output. f_n = 50 Hz. If galvanic pilot wire link used, add + 5 ms.

Characteristics	Value
Operate time accuracy in inverse time mode	±5.0% of the set value or ±20 ms [26]
Suppression of harmonics	RMS: No suppression DFT: -50 dB at f = n × fn, where n = 2, 3, 4, 5,… Peak-to-Peak: No suppression

26.30.18 Line differential protection with in-zone power transformer (LNPLDF) main settings

Table 52: Line differential protection with in-zone power transformer (LNPLDF) main settings

Parameter	Function	Value (Range)	Step
Low operate value	LNPLDF	10...200 % I_r	1
High operate value	LNPLDF	200...4000 % I_r	1
Start value 2.H	LNPLDF	10...50%	1
Time multiplier	LNPLDF	0.05...15.00	0.01
Operating curve type	LNPLDF	1 = ANSI Ext. inv. 3 = ANSI Norm. inv. 5 = ANSI Def. Time 9 = IEC Norm. inv. 10 = IEC Very inv. 12 = IEC Ext. inv. 15 = IEC Def. Time	-
Operate delay time	LNPLDF	45...200000 ms	1
CT ratio correction	LNPLDF	0.200...5.000	0.001

26.30.19 Sampled measured value based line differential protection with in-zone power transformer (LN2PLDF)

Table 53: Sampled measured value based line differential protection with in-zone power transformer (LN2PLDF)

Characteristics	Value	
Operation accuracy	Depending on the frequency of the measured current: f_n ±2 Hz	
	Low stage	±2.5% of the set value
	High stage	±2.5% of the set value

Table continues on the next page

[26] *Low operate value* multiples in the range of 1.5...20

Characteristics	Value		
High stage, operate time [1, 2]	Minimum	Typical	Maximum
	17 ms	19 ms	22 ms
Reset time	Typically <40 ms		
Reset ratio	Typically 0.96		
Retardation time	<40 ms		
Operate time accuracy in definite time mode	±1.0% of the set value or ±20 ms		
Operate time accuracy in inverse time mode	±5.0% of the theoretical value or ±20 ms [3]		
Suppression of harmonics	RMS: No suppression DFT: -50 dB at f = n × fn, where n = 2, 3, 4, 5,… Peak-to-Peak: No suppression		

26.30.20 Sampled measured value based line differential protection with in-zone power transformer (LN2PLDF) main settings

Table 54: Sampled measured value based line differential protection with in-zone power transformer (LN2PLDF) main settings

Parameter	Function	Value (Range)	Step
Low operate value	LN2PLDF	10...200 % I_r	1
High operate value	LN2PLDF	200...4000 % I_r	1
Start value 2.H	LN2PLDF	10...50%	1
Time multiplier	LN2PLDF	0.05...15.00	0.01
Operating curve type	LN2PLDF	1=ANSI Ext. inv. 3=ANSI Norm. inv. 5=ANSI Def. Time 9=IEC Norm. inv. 10=IEC Very inv. 12=IEC Ext. inv. 15=IEC Def. Time	-
Operate delay time	LN2PLDF	45...200000 ms	1
CT ratio correction	LN2PLDF	0.200...5.000	0.001

[1] With default values of SV Delay and RSV-delay
[2] Measured with static power output. When differential current = 2 × *High operate value* and f_n = 50 Hz
[3] *Low operate value* multiples in the range of 1.5...20

26.30.21 Binary signal transfer (BSTGAPC)

Table 55: Binary signal transfer (BSTGAPC)

Characteristic		Value
Signalling delay	Fiber optic link	<5 ms
	Galvanic pilot wirelink	<10 ms

26.30.22 Switch-onto-fault protection (CVPSOF)

Table 56: Switch-onto-fault protection (CVPSOF)

Characteristic	Value
Operation accuracy	Depending on the frequency of the voltage measured: f_n ±2Hz Current: ±1.5% of the set value or ±0.002 × I_n Voltage: ±1.5% of the set value or ±0.002 × U_n
Operate time accuracy	±1.0% of the set value or ±20 ms
Suppression of harmonics	DFT: -50 dB at f = n × f_n, where n = 2, 3, 4, 5,...

26.30.23 Switch-onto-fault protection (CVPSOF) main settings

Table 57: Switch-onto-fault protection (CVPSOF) main settings

Parameter	Function	Value (Range)	Step
SOTF reset time	CVPSOF	0...60000 ms	10

26.30.24 Three-phase non-directional overcurrent protection (PHxPTOC)

Table 58: Three-phase non-directional overcurrent protection (PHxPTOC)

Characteristic		Value
Operation accuracy	PHLPTOC	Depending on the frequency of the measured current: f_n ±2 Hz
		±1.5% of the set value or ±0.002 × I_n
	PHHPTOC and PHIPTOC	±1.5% of the set value or ±0.002 × I_n (at currents in the range of 0.1…10 × I_n) ±5.0% of the set value (at currents in the range of 10…40 × I_n)

Table continues on the next page

Characteristic		Value		
Start time [27]	PHIPTOC [28]:	Minimum	Typical	Maximum
	I_{Fault} = 2 × set *Start value*	8 ms	12 ms	15 ms
	$I_{Fault}t$ = 10 × set *Start value*	7 ms	9 ms	12 ms
	PHHPTOC and PHLPTOC [29]:	23 ms	26 ms	29 ms
	I_{Fault} = 2 × set *Start value*			
Reset time		Typically <40 ms		
Reset ratio		Typically 0.96		
Retardation time		<30 ms		
Operate time accuracy in definite time mode		±1.0% of the set value or ±20 ms		
Operate time accuracy in inverse time mode		±5.0% of the theoretical value or ±20 ms		
Suppression of harmonics		RMS: No suppression DFT: -50 dB at f = n × f_n, where n = 2, 3, 4, 5,… Peak-to-Peak: No suppression P-to-P+backup: No suppression		

26.30.25 Three-phase non-directional overcurrent protection (PHxPTOC) main settings

Table 59: Three-phase non-directional overcurrent protection (PHxPTOC) main settings

Parameter	Function	Value (Range)	Step
Start value	PHLPTOC	0.05…10.00 × I_n	0.01
	PHHPTOC and PHIPTOC	0.10...40.00 × I_n	0.01
Time multiplier	PHLPTOC and PHHPTOC	0.025...15.000	0.005
Operate delay time	PHLPTOC and PHHPTOC	20...300000 ms	10
	PHIPTOC	20...300000 ms	10
Operating curve type [30]	PHLPTOC	Definite or inverse time Curve type: 1, 2, 3, 4, 5, 6, 7, 8, 9, 10, 11, 12, 13, 14, 15, 17, 18, 19, 20	
	PHHPTOC	Definite or inverse time Curve type: 1, 3, 5, 9, 10, 12, 15, 17	
	PHIPTOC	Definite time	

[27] Set *Operate curve type* = IEC definite time, Measurement mode = default (depends on stage), current before fault = 0.0 × In, fn = 50 Hz, fault current in one phase with nominal frequency injected from random phase angle, results based on statistical distribution of 1000 measurements
[28] Measured with static signal output (SSO)
[29] Includes the delay of the signal output contact (SO)
[30] For further reference, see the Operation characteristics table

26.30.26 Three-phase non-directional instantaneous only overcurrent protection (PHIPIOC)

Table 60: Three-phase non-directional instantaneous only overcurrent protection (PHIPIOC)

Characteristic		Value		
Operation accuracy		Depending on the frequency of the measured current: fn ±2 Hz ±1.5% of set value or ±0.002 xIn (at currents in the range of 0.1…10 xIn) ±5.0% of the set value (at currents in the range of 10…40 xIn)		
Operate time [31, 32]		Minimum	Typical	Maximum
	IFault = 2x set Start value	15ms	19ms	23ms
	IFault = 10x set Start value	14ms	17ms	20ms
Reset time [33]		Typically <40ms		
Reset ratio		Typically 0.96		
Critical impulse time [34, 35]		Typically 2ms		

26.30.27 Three-phase non-directional instantaneous only overcurrent protection (PHIPIOC) main settings

Table 61: Three-phase non-directional instantaneous only overcurrent protection (PHIPIOC) main settings

Parameter	Function	Values (Range)	Step
Start value	PHIPIOC	0.10...40.00	0.01

31 Current before fault = 0 xIn, fn = 50 Hz, fault current in one phase with nominal frequency injected from random phase angle, results based on statistical distribution of 1000 measurements.
32 Measured with the power output (PO).
33 Measured with the power output (PO).
34 Measured with the power output (PO).
35 Start value = 2.00 xIn. Fault current in test increased from at 0 to 3 times set Start value.

26.30.28 Three-phase non-directional long-time overcurrent protection (PHLTPTOC)

Table 62: Three-phase non-directional long-time overcurrent protection (PHLTPTOC)

Characteristic		Value		
Operation accuracy		Depending on the frequency of the measured current: f_n ±2 Hz		
	PHLTPTOC	±1.5% of the set value or ±0.002 × I_n		
Start time[36]		Minimum	Typical	Maximum
	PHLTPTOC [37] I_{Fault} = 2 × set *Start value*	23 ms	26 ms	29 ms
Reset time		Typically <40 ms		
Reset ratio		Typically 0.96		
Retardation time [38]		<30 ms [39] <35 ms [40]		
Operate time accuracy in definite time mode		±1.0% of the set value or ±20 ms		
Operate time accuracy in inverse time mode		±5.0% of the theoretical value or ±20 ms [41]		
Suppression of harmonics		RMS: No suppression DFT: -50 dB at f = n × f_n, where n = 2, 3, 4, 5,… Peak-to-Peak: No suppression P-to-P+backup: No suppression		

26.30.29 Three-phase non-directional long-time overcurrent protection (PHLTPTOC) main settings

Table 63: Three-phase non-directional long-time overcurrent protection (PHLTPTOC) main settings

Parameter	Function	Value (Range)	Step
Start value	PHLTPTOC	0.05…10.00 × I_n	0.01
Time multiplier	PHLTPTOC	0.025...15.000	0.005
Operate delay time	PHLTPTOC	40…300000 ms	10
Operating curve type [42]	PHLTPTOC	Definite or inverse time Curve type: 5, 14, 15, 17, 21, 22, 23, 24, 26, 27, 28, 29	

[36] = default (depends on stage), current before fault = 0.0 × I_n, f_n = 50 Hz, fault current in one phase with nominal frequency injected from random phase angle, results based on statistical distribution of 1000 measurements.
[37] Includes the delay of the signal output contact (SO).
[38] IFault ≤ 2 × set *Start value*
[39] *Measurement mode* "DFT" or "RMS"
[40] *Measurement mode* "Pk-to-Pk" or "Pk-to-Pk 0+ backup"
[41] *Maximum Start value* = 2.5 × I_n, *Start value* multiples in the range of 1.5...20.
[42] For further reference, see the Operation characteristics table

26.30.30 Three-phase directional overcurrent protection (DPHxPDOC)

Table 64: Three-phase directional overcurrent protection (DPHxPDOC)

Characteristic		Value		
Operation accuracy	DPHLPDOC	Depending on the frequency of the current/voltage measured: f_n ±2 Hz		
		Current: ±1.5% of the set value or ±0.002 × I_n Voltage: ±1.5% of the set value or ±0.002 × U_n Phase angle: ±2°		
	DPHHPDOC	Current: ±1.5% of the set value or ±0.002 × I_n (at currents in the range of 0.1…10 × I_n) ±5.0% of the set value (at currents in the range of 10…40 × I_n) Voltage: ±1.5% of the set value or ±0.002 × U_n Phase angle: ±2°		
Start time [43, 44]	I_{Fault} = 2.0 × set *Start value*	Minimum	Typical	Maximum
		39 ms	43 ms	47 ms
Reset time		Typically 40 ms		
Reset ratio		Typically 0.96		
Retardation time		<35 ms		
Operate time accuracy in definite time mode		±1.0% of the set value or ±20 ms		
Operate time accuracy in inverse time mode		±5.0% of the theoretical value or ±20 ms [45]		
Suppression of harmonics		DFT: -50 dB at f = n × f_n, where n = 2, 3, 4, 5,…		

[43] *Measurement mode* and Pol quantity = default, current before fault = 0.0 × I_n, voltage before fault = 1.0 × U_n, f_n = 50 Hz, fault current in one phase with nominal frequency injected from random phase angle, results based on statistical distribution of 1000 measurements
[44] Includes the delay of the signal output contact
[45] Maximum *Start value* = 2.5 × I_n, *Start value* multiples in range of 1.5...20

26.30.31 Three-phase directional overcurrent protection (DPHxPDOC) main settings

Table 65: Three-phase directional overcurrent protection (DPHxPDOC) main settings

Parameter	Function	Value (Range)	Step
Start value	DPHLPDOC	0.05…10.00 × I_n	0.01
	DPHHPDOC	0.10...40.00 × I_n	0.01
Time multiplier	DPHxPDOC	0.025...15.000	0.005
Operate delay time	DPHxPDOC	35...300000 ms	5
Directional mode	DPHxPDOC	1 = Non-directional 2 = Forward 3 = Reverse	-
Characteristic angle	DPHxPDOC	-179...180°	1
Operating curve type [46]	DPHLPDOC	Definite or inverse time Curve type: 1, 2, 3, 4, 5, 6, 7, 8, 9, 10, 11, 12, 13, 14, 15, 17, 18, 19	
	DPHHPDOC	Definite or inverse time Curve type: 1, 3, 5, 9, 10, 12, 15, 17	

26.30.32 Non-directional earth-fault protection (EFxPTOC)

Table 66: Non-directional earth-fault protection (EFxPTOC)

Characteristic		Value		
Operation accuracy	EFLPTOC	Depending on the frequency of the measured current: fn ±2 Hz ±1.5% of the set value or ±0.002 × I_n		
	EFHPTOC and EFIPTOC	±1.5% of the set value or ±0.002 × I_n (at currents in the range of 0.1…10 × I_n) ±5.0% of the set value (at currents in the range of 10…40 × I_n)		
Start time [47]	EFIPTOC [48]:	Minimum	Typical	Maximum
	I_{Fault} = 2 × set *Start value*	8 ms	11 ms	14 ms
	I_{Fault} = 10 × set *Start value*	8 ms	9 ms	11 ms

Table continues on the next page

[46] For further reference, see the Operating characteristics table

[47] *Measurement mode* = default (depends on stage), current before fault = 0.0 × I_n, f_n = 50 Hz, fault current in one phase with nominal frequency injected from random phase angle, results based on statistical distribution of 1000 measurements

[48] Measured with static signal output (SSO)

Characteristic		Value		
	EFHPTOC and EFLPTOC [49]:	Minimum	Typical	Maximum
	I_{Fault} = 2 × set *Start value*	23 ms	26 ms	29 ms
Reset time		Typically <40 ms		
Reset ratio		Typically 0.96		
Retardation time		<30 ms		
Operate time accuracy in definite time mode		±1.0% of the set value or ±20 ms		
Operate time accuracy in inverse time mode		±5.0% of the theoretical value or ±20 ms [50]		
Suppression of harmonics		RMS: No suppression DFT: -50 dB at f = n × f_n, where n = 2, 3, 4, 5,… Peak-to-Peak: No suppression		

26.30.33 Non-directional earth-fault protection (EFxPTOC) main settings

Table 67: Non-directional earth-fault protection (EFxPTOC) main settings

Parameter	Function	Value (Range)	Step
Start value	EFLPTOC	0.010…10.000 × I_n	0.005
	EFHPTOC	0.10...40.00 × I_n	0.01
	EFIPTOC	1.00...40.00 × I_n	0.01
Time multiplier	EFLPTOC and EFHPTOC	0.025...15.000	0.005
Operate delay time	EFLPTOC and EFHPTOC	40...300000 ms	10
	EFIPTOC	20...300000 ms	10
Operating curve type [51]	EFLPTOC	Definite or inverse time Curve type: 1, 2, 3, 4, 5, 6, 7, 8, 9, 10, 11, 12, 13, 14, 15, 17, 18, 19	
	EFHPTOC	Definite or inverse time Curve type: 1, 3, 5, 9, 10, 12, 15, 17	
	EFIPTOC	Definite time	

[49] Includes the delay of the signal output contact (SO)
[50] Maximum *Start value* = 2.5 × I_n, *Start value* multiples in the range of 1.5...20
[51] For further reference, see the Operation characteristics table

26.30.34 Non-directional earth-fault protection, instantaneous only stage (EFIPIOC)

Table 68: Non-directional earth-fault protection, instantaneous only stage (EFIPIOC)

Characteristic		Value		
Operation accuracy		Depending on the frequency of the measured current: fn ±2 Hz		
		±1.5% of set value or ±0.002 xIn (at currents in the range of 0.1…10 xIn) ±5.0% of the set value (at currents in the range of 10…40 xIn)		
Operate time [52, 53]		Minimum	Typical	Maximum
	IFault = 2x set Start value	12ms	15ms	19ms
	IFault = 10x set Start value	12ms	13ms	16ms
Reset time		Typically <40ms		
Reset ratio		Typically 0.96		
Critical impulse time [54, 55]		Typically 2ms		

26.30.35 Non-directional earth-fault protection, instantaneous only stage (EFIPIOC) main settings

Table 69: Non-directional earth-fault protection, instantaneous only stage (EFIPIOC) main settings

Parameter	Function	Values (Range)	Step
Start value	EFIPIOC	1.00...40.00	0.01

[52] Current before fault = 0 xIn, fn = 50 Hz, fault current in one phase with nominal frequency injected from random phase angle, results based on statistical distribution of 1000 measurements.
[53] Measured with the power output (PO).
[54] Measured with the power output (PO).
[55] Start value = 2.00 xIn. Fault current in test increased from at 0 to 3 times set Start value.

26.30.36 Non-directional earth-fault protection with faulty phase indication (EFPxPTOC)

Table 70: Non-directional earth-fault protection with faulty phase indication (EFPxPTOC)

Characteristic		Value		
Operation accuracy	EFPLPTOC	Depending on the frequency of the measured current: fn ±2 Hz ±1.5% of the set value or ±0.002 × I_n		
	EFPHPTOC and EFPIPTOC	±1.5% of the set value or ±0.002 × I_n (at currents in the range of 0.1…10 × I_n) ±5.0% of the set value (at currents in the range of 10…40 × I_n)		
Start time [56]	EFPIPTOC [57]:	Minimum	Typical	Maximum
	I_{Fault} = 2 × set *Start value*	8 ms	11 ms	14 ms
	I_{Fault} = 10 × set *Start value*	8 ms	9 ms	11 ms
	EFPHPTOC and EFPLPTOC [58]:	Minimum	Typical	Maximum
	I_{Fault} = 2 × set *Start value*	23 ms	26 ms	29 ms
Reset time		Typically <40 ms		
Reset ratio		Typically 0.96		
Retardation time		<30 ms		
Operate time accuracy in definite time mode		±1.0% of the set value or ±20 ms		
Operate time accuracy in inverse time mode		±5.0% of the theoretical value or ±20 ms [59]		
Suppression of harmonics		RMS: No suppression DFT: -50 dB at f = n × f_n, where n = 2, 3, 4, 5,… Peak-to-Peak: No suppression		

[56] *Measurement mode* = default (depends on stage), current before fault = 0.0 × I_n, f_n = 50 Hz, fault current in one phase with nominal frequency injected from random phase angle, results based on statistical distribution of 1000 measurements
[57] Measured with static signal output (SSO)
[58] Includes the delay of the signal output contact (SO)
[59] Maximum *Start value* = 2.5 × I_n, *Start value* multiples in the range of 1.5...20

26.30.37 Non-directional earth-fault protection with faulty phase indication (EFPxPTOC) main settings

Table 71: Non-directional earth-fault protection with faulty phase indication (EFPxPTOC) main settings

Parameter	Function	Value (Range)	Step
Start value	EFPLPTOC	0.010...10.000 × I_n	0.005
	EFPHPTOC	0.10...40.00 × I_n	0.01
	EFPIPTOC	1.00...40.00 × I_n	0.01
Time multiplier	EFPLPTOC and EFPHPTOC	0.025...15.000	0.005
Operate delay time		20...300000 ms	10
Operating curve type [60]	EFPLPTOC	Definite or inverse time Curve type: 1, 2, 3, 4, 5, 6, 7, 8, 9, 10, 11, 12, 13, 14, 15, 17, 18, 19	
	EFPHPTOC	Definite or inverse time Curve type: 1, 3, 5, 9, 10, 12, 15, 17	
	EFPIPTOC	Definite time	

26.30.38 Directional earth-fault protection (DEFxPDEF)

Table 72: Directional earth-fault protection (DEFxPDEF)

Characteristic		Value
Operation accuracy	DEFLPDEF	Depending on the frequency of the measured current: f_n ±2 Hz
		Current: ±1.5% of the set value or ±0.002 × I_n Voltage ±1.5% of the set value or ±0.002 × U_n Phase angle: ±2°

Table continues on the next page

[60] For further reference, see the Operation characteristics table

Characteristic		Value		
	DEFHPDEF	Current: ±1.5% of the set value or ±0.002 × I_n (at currents in the range of 0.1…10 × I_n) ±5.0% of the set value (at currents in the range of 10…40 × I_n) Voltage: ±1.5% of the set value or ±0.002 × U_n Phase angle: ±2°		
Start time [61, 62]	DEFHPDEF	Minimum	Typical	Maximum
	I_{Fault} = 2 × set *Start value*	42 ms	46 ms	49 ms
	DEFLPDEF	Minimum	Typical	Maximum
	I_{Fault} = 2 × set *Start value*	58 ms	62 ms	66 ms
Reset time		Typically 40 ms		
Reset ratio		Typically 0.96		
Retardation time		<30 ms		
Operate time accuracy in definite time mode		±1.0% of the set value or ±20 ms		
Operate time accuracy in inverse time mode		±5.0% of the theoretical value or ±20 ms [63]		
Suppression of harmonics		RMS: No suppression DFT: -50 dB at f = n × f_n, where n = 2, 3, 4, 5,… Peak-to-Peak: No suppression		

26.30.39 Directional earth-fault protection (DEFxPDEF) main settings

Table 73: Directional earth-fault protection (DEFxPDEF) main settings

Parameter	Function	Value (Range)	Step
Start value	DEFLPDEF	0.010…10.000 × I_n	0.005
	DEFHPDEF	0.10...40.00 × I_n	0.01
Directional mode	DEFxPDEF	1 = Non-directional 2 = Forward 3 = Reverse	-

Table continues on the next page

61 Set *Operate curve type* = IEC definite time, *Measurement mode* = default (depends on stage), current before fault = 0.0 × I_n, f_n = 50 Hz, earth-fault current with nominal frequency injected from random phase angle, results based on statistical distribution of 1000 measurements

62 Includes the delay of the signal output contact

63 Maximum *Start value* = 2.5 × I_n, *Start value* multiples in range of 1.5...20

Parameter	Function	Value (Range)	Step
Time multiplier	DEFxPDEF	0.025...15.000	0.005
Operate delay time	DEFLPDEF	50...300000 ms	10
	DEFHPDEF	40...300000 ms	10
Operating curve type [64]	DEFLPDEF	Definite or inverse time Curve type: 1, 2, 3, 4, 5, 6, 7, 8, 9, 10, 11, 12, 13, 14, 15, 17, 18, 19	
	DEFHPDEF	Definite or inverse time Curve type: 1, 3, 5, 15, 17	
Operation mode	DEFxPDEF	1 = Phase angle 2 = IoSin 3 = IoCos 4 = Phase angle 80 5 = Phase angle 88	-

26.30.40 Directional earth-fault protection with faulty phase indication (DEFPxPDEF)

Table 74: Directional earth-fault protection with faulty phase indication (DEFPxPDEF)

Characteristic		Value		
Operation accuracy	DEFPLPDEF	Depending on the frequency of the measured current: f_n ±2 Hz		
		Current: ±1.5% of the set value or ±0.002 × I_n Voltage ±1.5% of the set value or ±0.002 × U_n Phase angle: ±2°		
	DEFPHPDEF	Current: ±1.5% of the set value or ±0.002 × I_n (at currents in the range of 0.1…10 × I_n) ±5.0% of the set value (at currents in the range of 10…40 × I_n) Voltage: ±1.5% of the set value or ±0.002 × U_n Phase angle: ±2°		
Start time [65, 66]	DEFPHPDEF	Minimum	Typical	Maximum

Table continues on the next page

[64] For further reference, see the Operating characteristics table
[65] Set *Operate curve type* = IEC definite time, *Measurement mode* = default (depends on stage), current before fault = 0.0 × I_n, f_n = 50 Hz, earth-fault current with nominal frequency injected from random phase angle, results based on statistical distribution of 1000 measurements
[66] Includes the delay of the signal output contact

Characteristic		Value		
	I_{Fault} = 2 × set *Start value*	42 ms	46 ms	49 ms
	DEFPLPDEF	Minimum	Typical	Maximum
	I_{Fault} = 2 × set *Start value*	58 ms	62 ms	66 ms
Reset time		Typically 40 ms		
Reset ratio		Typically 0.96		
Retardation time		<40 ms		
Operate time accuracy in definite time mode		±1.0% of the set value or ±20 ms		
Operate time accuracy in inverse time mode		±5.0% of the theoretical value or ±20 ms [67]		
Suppression of harmonics		RMS: No suppression DFT: -50 dB at f = n × f_n, where n = 2, 3, 4, 5,… Peak-to-Peak: No suppression		

26.30.41 Directional earth-fault protection with faulty phase indication (DEFPxPDEF)

Table 75: Directional earth-fault protection with faulty phase indication (DEFPxPDEF)

Parameter	Function	Value (Range)	Step
Start value	DEFPLPDEFF	0.005...10.000 × I_n	0.001
	DEFPHPDEF	0.10...40.00 × I_n	0.01
Directional mode	DEFPxPDEF	1 = Non-directional 2 = Forward 3 = Reverse	-
Time multiplier	DEFPxPDEF	0.025...15.000	0.005
Operate delay time	DEFPLPDEF	50...300000 ms	10
	DEFPHPDEF	40...300000 ms	10
Operating curve type [68]	DEFPLPDEF	Definite or inverse time Curve type: 1, 2, 3, 4, 5, 6, 7, 8, 9, 10, 11, 12, 13, 14, 15, 17, 18, 19	
	DEFPHPDEF	Definite or inverse time Curve type: 1, 3, 5, 15, 17	
Operation mode	DEFPxPDEF	1 = Phase angle 2 = IoSin 3 = IoCos 4 = Phase angle 80 5 = Phase angle 88	-

[67] Maximum *Start value* = 2.5 × I_n, *Start value* multiples in range of 1.5...20
[68] For further reference, see the Operating characteristics table

26.30.42 Three-phase power directional element (DPSRDIR) main settings

Table 76: Three-phase power directional element (DPSRDIR) main settings

Parameter	Function	Value (Range)	Step
Release delay time	DPSRDIR	0...1000 ms	1
Characteristic angle	DPSRDIR	-179...180°	1
Directional mode	DPSRDIR	1 = Non-directional 2 = Forward 3 = Reverse	-

26.30.43 Neutral power directional element (DNZSRDIR) main settings

Table 77: Neutral power directional element (DNZSRDIR) main settings

Parameter	Function	Value (Range)	Step
Release delay time	DNZSRDIR	0...1000 ms	10
Directional mode	DNZSRDIR	1 = Non-directional 2 = Forward 3 = Reverse	-
Characteristic angle	DNZSRDIR	-179...180°	1
Pol quantity	DNZSRDIR	3 = Zero seq. volt. 4 = Neg. seq. volt.	-

26.30.44 Load blinder (LBRDOB)

Table 78: Load blinder (LBRDOB)

Characteristic	Value
Operation accuracy	Depending on the frequency of the current measured: f_n
	Current: ±1.5% of the set value or ±0.002 × I_n Voltage: ±1.5% of the set value or ±0.002 × U_n Impedance accuracy: ±3% of the set value (In range load angle<75 deg) ±4.5% of the set value (In range 75 deg<load angle<83 deg) ±8% of the set value (In range load angle>83 deg) Phase angle: ±2°
Reset ratio	Typically 0.96
Operation time [69, 70]	Typically 30 ms
Reset time	Typically 25 ms

26.30.45 Load blinder (LBRDOB) main settings

Table 79: Load blinder (LBRDOB) main settings

Parameter	Function	Value (Range)	Step
Resistive reach Fw	LBRDOB	1.00...6000.00 Ohm	0.01
Resistive reach Rv	LBRDOB	1.00...6000.00 Ohm	0.01
Max impedance angle	LBRDOB	5...85 Deg	1

Table continues on the next page

[69] f_n= 50Hz, results based on statistical distribution of 1000 measurements
[70] Includes the delay of the signal output contact

Parameter	Function	Value (Range)	Step
Min impedance angle	LBRDOB	-85...-5 Deg	1
Directional mode	LBRDOB	1= Non-directional 2= Forward 3= Reverse	-

26.30.46 Cold load pickup (CLPGAPC)

Table 80: Cold load pickup (CLPGAPC)

Characteristic	Value
Operation accuracy	Depending on the frequency of the measured current: f_n ±2 Hz
	Current measurement: ±1.5% of the set value or ±0.002 x I_n Voltage measurement: ±1.5% of the set value or ±0.002 x U_n
Operate time accuracy in definite time mode	±1.0% of the set value or ±20 ms
Suppression of harmonics	DFT: -50 dB at f = n × f_n, where n = 2, 3, 4, 5, …

26.30.47 Cold load pickup (CLPGAPC) main settings

Table 81: Cold load pickup (CLPGAPC) main settings

Parameter	Function	Values (Range)	Step
Fast reset delay	CLPGAPC	0...3600000	1
Type of time reset	CLPGAPC	1=Freeze Op timer 2=Decrease Op timer	
Cold state delay	CLPGAPC	0...86400	1
Pickup duration	CLPGAPC	0...86400	1

26.30.48 Admittance-based earth-fault protection (EFPADM)

Table 82: Admittance-based earth-fault protection (EFPADM)

Characteristic	Value		
Operation accuracy [71]	At the frequency f = f_n		
	±1.0% or ±0.01 mS (In range of 0.5...100 mS)		
Start time [72]	Minimum	Typical	Maximum
	56 ms	60 ms	64 ms
Reset time	40 ms		
Operate time accuracy	±1.0% of the set value of ±20 ms		
Suppression of harmonics	-50 dB at f = n × f_n, where n = 2, 3, 4, 5,…		

26.30.49 Admittance-based earth-fault protection (EFPADM) main settings

Table 83: Admittance-based earth-fault protection (EFPADM) main settings

Parameter	Function	Value (Range)	Step
Voltage start value	EFPADM	0.01...2.00 × U_n	0.01
Directional mode	EFPADM	1 = Non-directional 2 = Forward 3 = Reverse	-
Operation mode	EFPADM	1 = Yo 2 = Go 3 = Bo 4 = Yo, Go 5 = Yo, Bo 6 = Go, Bo 7 = Yo, Go, Bo	-
Operate delay time	EFPADM	60...300000 ms	10
Circle radius	EFPADM	0.05...500.00 mS	0.01
Circle conductance	EFPADM	-500.00...500.00 mS	0.01
Circle susceptance	EFPADM	-500.00...500.00 mS	0.01
Conductance forward	EFPADM	-500.00...500.00 mS	0.01
Conductance reverse	EFPADM	-500.00...500.00 mS	0.01

Table continues on the next page

[71] Uo = 1.0 × U_n

[72] Includes the delay of the signal output contact, results based on statistical distribution of 1000 measurements

Parameter	Function	Value (Range)	Step
Susceptance forward	EFPADM	-500.00...500.00 mS	0.01
Susceptance reverse	EFPADM	-500.00...500.00 mS	0.01
Conductance tilt Ang	EFPADM	-30...30°	1
Susceptance tilt Ang	EFPADM	-30...30°	1

26.30.50 Multifrequency admittance-based earth-fault protection (MFADPSDE)

Table 84: Multifrequency admittance-based earth-fault protection (MFADPSDE)

Characteristic	Value
Operation accuracy	Depending on the frequency of the measured voltage: f_n ±2 Hz
	±1.5% of the set value or ±0.002 × U_n
Start time [73]	Typically 35 ms
Reset time	Typically 40 ms
Operate time accuracy	±1.0% of the set value or ±20 ms

26.30.51 Multifrequency admittance-based earth-fault protection (MFADPSDE) main settings

Table 85: Multifrequency admittance-based earth-fault protection (MFADPSDE) main settings

Parameter	Function	Value (Range)	Step
Directional mode	MFADPSDE	2 = Forward 3 = Reverse	-
Voltage start value	MFADPSDE	0.01...1.00 × U_n	0.01
Operate delay time	MFADPSDE	60...1200000 ms	10
Operating quantity	MFADPSDE	1 = Adaptive 2 = Amplitude 3 = Resistive	-
Min operate current	MFADPSDE	0.005...5.000 × I_n	0.001
Operation mode	MFADPSDE	1 = Intermittent EF 2 = Transient EF 3 = General EF 4 = Alarming EF	-
Peak counter limit	MFADPSDE	2...20	1

[73] Includes the delay of the signal output contact, results based on statistical distribution of 1000 measurements

26.30.52 Touch voltage based earth-fault current protection IFPTOC (ANSI 46SNQ/59N)

Table 86: Touch voltage based earth-fault current protection IFPTOC (ANSI 46SNQ/59N)

Characteristics	Value
Operation accuracy	Depending on the frequency of the measured current f_n ±2 Hz
	Earth-fault current and touch voltage: ±1% of the set value or ±0.005 × I_n for I_F^{est} Accuracy of U_{EPR}^{est} follows I_F^{est} accuracy. Residual voltage: ±1.5% of the set value or ±0.002 × U_n Residual current: ±1.5% of the set value or ±0.002 × I_n (at currents ≤10 x I_n, when Uo is nominal) ±5.0% of the set value (at currents > 10 x I_n)
Start time [74]	Typically 30 ms
Reset time	<30 ms
Reset ratio	Typically 0.96
Retardation time	<50 ms
Operate time accuracy	±1.0% of the set value or ±20 ms (DT) ±3% of the theoretical value or ±40 ms (IDMT)

26.30.53 Touch voltage-based earth-fault current protection IFPTOC (ANSI 46SNQ/59N) main settings

Table 87: Touch voltage-based earth-fault current protection IFPTOC (ANSI 46SNQ/59N) main settings

Parameter	Function	Value (Range)	Step
Operation mode	IFPTOC	1=Alarming EF 2=Tripping EF	
Voltage start value	IFPTOC	0.01...1.00 xUn	0.01
XC stage PP V Val	IFPTOC	0.01...1.00 xUn	0.01
XC stage PP Chg Val	IFPTOC	0.00...1.00 xUn	0.01
Operating curve type	IFPTOC	15=Definite time 18=Inverse time EN50522 19=Inverse time IEEE80	
EF current Str Val	IFPTOC	0.005...1.000 xIn	0.001
IEEE multiplier	IFPTOC	50.0...5000.0	0.1

Table continues on the next page

[74] Measured with static signal output (SSO)

Parameter	Function	Value (Range)	Step
IDMT stage Min Op Tm	IFPTOC	50...6000 ms	10
IDMT stage Max Op Tm	IFPTOC	500...7200000 ms	10
Touch Vol Str Val	IFPTOC	10.0...2900.0 V	0.1
Operation principle	IFPTOC	1=EF current-based 2=Touch voltage-based	
UTp multiplier	IFPTOC	0.10...5.00	0.01
Ena RF compensation	IFPTOC	0=Disable 1=Enable	
CB delay Comp	IFPTOC	0...200 ms	1
Intr EF counter Lim	IFPTOC	3...20	1

26.30.54 Wattmetric-based earth-fault protection (WPWDE)

Table 88: Wattmetric-based earth-fault protection (WPWDE)

Characteristic	Value
Operation accuracy	Depending on the frequency of the measured current: f_n ±2 Hz
	Current and voltage: ±1.5% of the set value or ±0.002 × I_n Power: ±3% of the set value or ±0.002 × P_n
Start time [75, 76]	Typically 63 ms
Reset time	Typically 40 ms
Reset ratio	Typically 0.96
Operate time accuracy in definite time mode	±1.0% of the set value or ±20 ms
Operate time accuracy in IDMT mode	±5.0% of the set value or ±20 ms
Suppression of harmonics	-50 dB at f = n × f_n, where n = 2,3,4,5,...

[75] Io varied during the test, U_o = 1.0 × U_n = phase to earth voltage during earth fault in compensated or un-earthed network, the residual power value before fault = 0.0 pu, f_n = 50 Hz, results based on statistical distribution of 1000 measurements

[76] Includes the delay of the signal output contact

26.30.55 Wattmetric-based earth-fault protection (WPWDE) main settings

Table 89: Wattmetric-based earth-fault protection (WPWDE) main settings

Parameter	Function	Value (Range)	Step
Directional mode	WPWDE	2 = Forward 3 = Reverse	-
Current start value	WPWDE	0.010...5.000 × I_n	0.001
Voltage start value	WPWDE	0.010...1.000 × U_n	0.001
Power start value	WPWDE	0.003...1.000 × S_n	0.001
Reference power	WPWDE	0.050...1.000 × S_n	0.001
Characteristic angle	WPWDE	-179...180°	1
Time multiplier	WPWDE	0.025...2.000	0.005
Operating curve type [77]	WPWDE	Definite or inverse time Curve type: 5, 15, 20	
Operate delay time	WPWDE	60...300000 ms	10
Min operate current	WPWDE	0.010. 1.000 × I_n	0.001
Min operate voltage	WPWDE	0.01. 1.00 × U_n	0.01

26.30.56 Transient/intermittent earth-fault protection (INTRPTEF)

Table 90: Transient/intermittent earth-fault protection (INTRPTEF)

Characteristic	Value
Operation accuracy (Uo criteria with transient protection)	Depending on the frequency of the measured current: f_n ±2 Hz
	±1.5% of the set value or ±0.002 × Uo
Operate time accuracy	±1.0% of the set value or ±20 ms
Suppression of harmonics	DFT: -50 dB at f = n × f_n, where n = 2, 3, 4, 5

26.30.57 Transient/intermittent earth-fault protection (INTRPTEF) main settings

Table 91: Transient/intermittent earth-fault protection (INTRPTEF) main settings

Parameter	Function	Value (Range)	Step
Directional mode	INTRPTEF	1 = Non-directional 2 = Forward 3 = Reverse	-
Operate delay time	INTRPTEF	40...1200000 ms	10

Table continues on the next page

[77] For further reference, see the Operating characteristics table

Parameter	Function	Value (Range)	Step
Voltage start value	INTRPTEF	0.05...0.50 × U_n	0.01
Operation mode	INTRPTEF	1 = Intermittent EF 2 = Transient EF	-
Peak counter limit	INTRPTEF	2...20	1
Min operate current	INTRPTEF	0.01. 1.00 × I_n	0.01

26.30.58 Harmonics-based earth-fault protection (HAEFPTOC)

Table 92: Harmonics-based earth-fault protection (HAEFPTOC)

Characteristic	Value
Operation accuracy	Depending on the frequency of the measured current: f_n ±2 Hz
	±5% of the set value or ±0.004 × I_n
Start time [78, 79]	Typically 77 ms
Reset time	Typically 40 ms
Reset ratio	Typically 0.96
Operate time accuracy in definite time mode	±1.0% of the set value or ±20 ms
Operate time accuracy in IDMT mode [80]	±5.0% of the set value or ±20 ms
Suppression of harmonics	-50 dB at f = f_n
	-3 dB at f = 13 × f_n

26.30.59 Harmonics-based earth-fault protection (HAEFPTOC) main settings

Table 93: Harmonics-based earth-fault protection (HAEFPTOC) main settings

Parameter	Function	Value (Range)	Step
Start value	HAEFPTOC	0.05. 5.00 × I_n	0.01
Time multiplier	HAEFPTOC	0.025...15.000	0.005
Operate delay time	HAEFPTOC	100...300000 ms	10
Operating curve type [81]	HAEFPTOC	Definite or inverse time Curve type: 1, 2, 3, 4, 5, 6, 7, 8, 9, 10, 11, 12, 13, 14, 15, 17, 18, 19	
Minimum operate time	HAEFPTOC	100...200000 ms	10

78 Fundamental frequency current = 1.0 × I_n, harmonics current before fault = 0.0 × I_n, harmonics fault current 2.0 × *Start value* , results based on statistical distribution of 1000 measurements
79 Includes the delay of the signal output contact
80 Maximum *Start value* = 2.5 × I_n, *Start value* multiples in range of 2...20
81 For further reference, see the Operation characteristics table

26.30.60 Negative-sequence overcurrent protection (NSPTOC)

Table 94: Negative-sequence overcurrent protection (NSPTOC)

Characteristic		Value		
Operation accuracy		Depending on the frequency of the measured current: f_n ±2 Hz		
		±1.5% of the set value or ±0.002 × I_n		
Start time [82, 83]		Minimum	Typical	Maximum
	I_{Fault} = 2 × set *Start value*	23 ms	26 ms	28 ms
	I_{Fault}= 10 × set *Start value*	15 ms	18 ms	20 ms
Reset time		Typically 40 ms		
Reset ratio		Typically 0.96		
Retardation time		<35 ms		
Operate time accuracy in definite time mode		±1.0% of the set value or ±20 ms		
Operate time accuracy in inverse time mode		±5.0% of the theoretical value or ±20 ms [84]		
Suppression of harmonics		DFT: -50 dB at f = n × f_n, where n = 2, 3, 4, 5,…		

26.30.61 Negative-sequence overcurrent protection (NSPTOC) main settings

Table 95: Negative-sequence overcurrent protection (NSPTOC) main settings

Parameter	Function	Value (Range)	Step
Start value	NSPTOC	0.01...5.00 × I_n	0.01
Time multiplier	NSPTOC	0.025...15.000	0.005
Operate delay time	NSPTOC	40...200000 ms	10
Operating curve type [85]	NSPTOC	Definite or inverse time Curve type: 1, 2, 3, 4, 5, 6, 7, 8, 9, 10, 11, 12, 13, 14, 15, 17, 18, 19	

[82] Negative sequence current before fault = 0.0, f_n = 50 Hz, results based on statistical distribution of 1000 measurements
[83] Includes the delay of the signal output contact
[84] Maximum *Start value* = 2.5 × I_n, *Start value* multiples in range of 1.5...20
[85] For further reference, see the Operation characteristics table

26.30.62 Phase discontinuity protection (PDNSPTOC)

Table 96: Phase discontinuity protection (PDNSPTOC)

Characteristic	Value
Operation accuracy	Depending on the frequency of the measured current: f_n ±2 Hz
	±2% of the set value
Start time	<70 ms
Reset time	Typically 40 ms
Reset ratio	Typically 0.96
Retardation time	<35 ms
Operate time accuracy in definite time mode	±1.0% of the set value or ±20 ms
Suppression of harmonics	DFT: -50 dB at f = n × f_n, where n = 2, 3, 4, 5,...

26.30.63 Phase discontinuity protection (PDNSPTOC) main settings

Table 97: Phase discontinuity protection (PDNSPTOC) main settings

Parameter	Function	Value (Range)	Step
Start value	PDNSPTOC	10...100%	1
Operate delay time	PDNSPTOC	100...30000 ms	1
Min phase current	PDNSPTOC	0.05...0.30 × I_n	0.01

26.30.64 Residual overvoltage protection (ROVPTOV)

Table 98: Residual overvoltage protection (ROVPTOV)

Characteristic		Value		
Operation accuracy		Depending on the frequency of the measured voltage: f_n ±2 Hz		
		±1.5% of the set value or ±0.002 × U_n		
Start time [86, 87]	U_{Fault} = 2 × set *Start value*	Minimum	Typical	Maximum
		22 ms	25 ms	29 ms
Reset time		Typically 40 ms		
Reset ratio		Typically 0.96		
Retardation time		<35 ms		

Table continues on the next page

[86] Residual voltage before fault = 0.0 × U_n, f_n = 50 Hz, residual voltage with nominal frequency injected from random phase angle, results based on statistical distribution of 1000 measurements

[87] Includes the delay of the signal output contact

Characteristic	Value
Operate time accuracy in definite time mode	±1.0% of the set value or ±20 ms
Suppression of harmonics	DFT: -50 dB at f = n × f_n, where n = 2, 3, 4, 5,…

26.30.65 Residual overvoltage protection (ROVPTOV) main settings

Table 99: Residual overvoltage protection (ROVPTOV) main settings

Parameter	Function	Value (Range)	Step
Start value	ROVPTOV	0.010...1.000 × U_n	0.001
Operate delay time	ROVPTOV	20...300000 ms	1

26.30.66 Three-phase undervoltage protection (PHPTUV)

Table 100: PHPTUV Technical data

Characteristic		Value		
Operation accuracy		Depending on the frequency of the voltage measured: f_n ±2 Hz		
		±1.5% of the set value or ±0.002 × U_n		
Start time		Minimum	Typical	Maximum
	U_{Fault} = 0.85 × set *Start value* [88, 89]	17 ms	20 ms	23 ms
	U_{Fault} = 0.85 × set *Start value* [90, 91]	51 ms	55 ms	58 ms
Reset time		Typically 40 ms		
Reset ratio		Depends on the set *Relative hysteresis*		
Retardation time		<35 ms		
Operate time accuracy in definite time mode		±1.0% of the set value or ±20 ms		
Operate time accuracy in inverse time mode		±5.0% of the theoretical value or ±20 ms[92]		
Suppression of harmonics		DFT: -50 dB at f = n × f_n, where n = 2, 3, 4, 5,…		

88 *Start value* = 0.97 × U_n, voltage level before fault = 1 × U_n, f_n = 50 Hz, undervoltage in one phase-to-phase voltage injected from random phase angle, results based on statistical distribution of 1000 measurements, includes the delay (≈0ms) of the static signal output (SSO) contact

89 Start time is accelerated when set *Operate delay time* < 60ms. The shorter the set delay, the shorter the start time. Here measurements done for *Operate delay time* = 20ms

90 *Start value* = 0.97 × U_n, voltage level before fault = 1 × U_n, f_n = 50 Hz, undervoltage in one phase-to-phase voltage injected from random phase angle, results based on statistical distribution of 1000 measurements, includes the delay (≈0ms) of the static signal output (SSO) contact

91 Valid when set *Operate delay time* ≥ 60ms or inverse time curve selected

92 Minimum *Start value* = 0.50, *Start value* multiples in range of 0.90...0.20

26.30.67 Three-phase undervoltage protection (PHPTUV) main settings

Table 101: Three-phase undervoltage protection (PHPTUV) main settings

Parameter	Function	Value (Range)	Step
Start value	PHPTUV	0.05...1.20 × U_n	0.01
Time multiplier	PHPTUV	0.025...15.000	0.005
Operate delay time	PHPTUV	20...300000 ms	10
Operating curve type[93]	PHPTUV	Definite or inverse time Curve type: 5, 15, 21, 22, 23	

26.30.68 Three-phase overvoltage variation protection (PHVPTOV)

Table 102: Three-phase overvoltage variation protection (PHVPTOV)

Characteristic	Value
Operation accuracy	Depending on the frequency of the measured voltage: f_n
	±1.5% of the set value or ±0.002 × U_n
Reset ratio	Depends on the set *Relative hysteresis*
Operate time accuracy in definite time mode	±1.0% of the set value or ±20 ms

26.30.69 Three-phase overvoltage variation protection (PHVPTOV) main settings

Table 103: Three-phase overvoltage variation protection (PHVPTOV) main settings

Parameter	Function	Value (Range)	Step
Start value	PHVPTOV	0.05...3.00 × U_n	0.01
Time interval	PHVPTOV	1...120 min	1
Num of start phases	PHVPTOV	1 = 1 out of 3 2 = 2 out of 3 3 = 3 out of 3	-
Voltage selection	PHVPTOV	1 = phase-to-earth 2 = phase-to-phase	-

[93] For further reference, see the Operation characteristics table

26.30.70 Three-phase overvoltage protection (PHPTOV)

Table 104: Three-phase overvoltage protection (PHPTOV)

Characteristic		Value		
Operation accuracy		Depending on the frequency of the measured voltage: f_n ±2 Hz		
		±1.5% of the set value or ±0.002 × U_n		
Start time [94, 95]		Minimum	Typical	Maximum
	U_{Fault} = 1.1 × set *Start value*	23 ms	27 ms	31 ms
Reset time		Typically 40 ms		
Reset ratio		Depends on the set *Relative hysteresis*		
Retardation time		<35 ms		
Operate time accuracy in definite time mode		±1.0% of the set value or ±20 ms		
Operate time accuracy in inverse time mode		±5.0% of the theoretical value or ±20 ms [96]		
Suppression of harmonics		DFT: -50 dB at f = n × f_n, where n = 2, 3, 4, 5,…		

26.30.71 Three-phase overvoltage protection (PHPTOV) main settings

Table 105: Three-phase overvoltage protection (PHPTOV) main settings

Parameter	Function	Value (Range)	Step
Start value	PHPTOV	0.05...1.60 × U_n	0.01
Time multiplier	PHPTOV	0.025...15.000	0.005
Operate delay time	PHPTOV	20...300000 ms	10
Operating curve type [97]	PHPTOV	Definite or inverse time Curve type: 5, 15, 17, 18, 19, 20	

26.30.72 Positive-sequence overvoltage protection (PSPTOV)

Table 106: Positive-sequence overvoltage protection (PSPTOV)

Characteristic		Value		
Operation accuracy		Depending on the frequency of the measured current: f_n ±2 Hz		
		±1.5% of the set value or ±0.002 × U_n		
Start time [98, 99]	U_{Fault} = 1.1 × set *Start value*	Minimum	Typical	Maximum

Table continues on the next page

94 *Start value* = 1.0 × U_n, Voltage before fault = 0.9 × U_n, f_n = 50 Hz, overvoltage in one phase-to-phase with nominal frequency injected from random phase angle, results based on statistical distribution of 1000 measurements
95 Includes the delay of the signal output contact
96 Maximum *Start value* = 1.20 × U_n, *Start value* multiples in range of 1.10...2.00
97 For further reference, see the Operation characteristics table
98 Positive-sequence voltage before fault = 0.0 × U_n, f_n = 50 Hz, positive-sequence overvoltage of nominal frequency injected from random phase angle
99 Measured with static signal output (SSO)

Characteristic		Value		
	U_{Fault} = 2 × set *Start value*	29 ms	32 ms	34 ms
		32 ms	24 ms	26 ms
Reset time		Typically 40 ms		
Reset ratio		Typically 0.96		
Retardation time		<35 ms		
Operate time accuracy in definite time mode		±1.0% of the set value or ±20 ms		
Suppression of harmonics		DFT: -50 dB at f = n × f_n, where n = 2, 3, 4, 5,…		

26.30.73 Positive-sequence overvoltage protection (PSPTOV) main settings

Table 107: Positive-sequence overvoltage protection (PSPTOV) main settings

Parameter	Function	Value (Range)	Step
Start value	PSPTOV	0.400...1.600 × U_n	0.001
Operate delay time	PSPTOV	40...120000 ms	10

26.30.74 Positive-sequence undervoltage protection (PSPTUV)

Table 108: Positive-sequence undervoltage protection (PSPTUV)

Characteristic		Value		
Operation accuracy		Depending on the frequency of the measured voltage: f_n ±2 Hz		
		±1.5% of the set value or ±0.002 × U_n		
Start time [100, 101]		Minimum	Typical	Maximum
	U_{Fault} = 0.99 × set *Start value*	52 ms	55 ms	58 ms
	U_{Fault} = 0.9 × set *Start value*	44 ms	47 ms	50 ms
Reset time		Typically 40 ms		
Reset ratio		Depends on the set *Relative hysteresis*		
Retardation time		<35 ms		
Operate time accuracy in definite time mode		±1.0% of the set value or ±20 ms		
Suppression of harmonics		DFT: -50 dB at f = n × f_n, where n = 2, 3, 4, 5,…		

100 *Start value* = 1.0 × U_n, positive-sequence voltage before fault = 1.1 × U_n, f_n = 50 Hz, positive sequence undervoltage with nominal frequency injected from random phase angle, results based on statistical distribution of 1000 measurements

101 Includes the delay of the signal output contact

26.30.75 Positive-sequence undervoltage protection (PSPTUV) main settings

Table 109: Positive-sequence undervoltage protection (PSPTUV) main settings

Parameter	Function	Value (Range)	Step
Start value	PSPTUV	0.010...1.200 × U_n	0.001
Operate delay time	PSPTUV	40...120000 ms	10
Voltage block value	PSPTUV	0.01...1.00 × U_n	0.01

26.30.76 Negative-sequence overvoltage protection (NSPTOV)

Table 110: Negative-sequence overvoltage protection (NSPTOV)

Characteristic		Value		
Operation accuracy		Depending on the frequency of the voltage measured: f_n		
		±1.5% of the set value or ±0.002 × U_n		
Start time [102],[103]		Minimum	Typical	Maximum
	U_{Fault} = 1.1 × set *Start value*	33 ms	35 ms	37 ms
	U_{Fault} = 2.0 × set *Start value*	24 ms	26 ms	28 ms
Reset time		Typically 40 ms		
Reset ratio		Typically 0.96		
Retardation time		<35 ms		
Operate time accuracy in definite time mode		±1.0% of the set value or ±20 ms		
Suppression of harmonics		DFT: -50 dB at f = n × f_n, where n = 2, 3, 4, 5,...		

26.30.77 Negative-sequence overvoltage protection (NSPTOV) main settings

Table 111: Negative-sequence overvoltage protection (NSPTOV) main settings

Parameter	Function	Value (Range)	Step
Start value	NSPTOV	0.010...1.000 × U_n	0.001
Operate delay time	NSPTOV	20...120000 ms	1

[102] Negative-sequence voltage before fault = 0.0 × U_n, f_n = 50 Hz, negative-sequence overvoltage with nominal frequency injected from random phase angle, results based on statistical distribution of 1000 measurements

[103] Includes the delay of the signal output contact

26.30.78 Frequency protection (FRPFRQ)

Table 112: Frequency protection (FRPFRQ)

Characteristic		Value
Operation accuracy	f>/f<	±5 mHz[104]
	df/dt	±50 mHz/s (in range |df/dt| <5 Hz/s) ±2.0% of the set value (in range 5 Hz/s < |df/dt| < 15 Hz/s)
Start time	f>/f<	<80 ms[105]
	df/dt	<120 ms
Reset time		<150 ms
Operate time accuracy		±1.0% of the set value or ±30 ms

26.30.79 Frequency protection (FRPFRQ) main settings

Table 113: Frequency protection (FRPFRQ) main settings

Parameter	Function	Value (Range)	Step
Operation mode	FRPFRQ	1 = Freq< 2 = Freq> 3 = df/dt 4 = Freq< + df/dt 5 = Freq> + df/dt 6 = Freq< OR df/dt 7 = Freq> OR df/dt	-
Start value Freq>	FRPFRQ	0.9000...1.4000 × f_n	0.0001
Start value Freq<	FRPFRQ	0.6500...1.1000 × f_n	0.0001
Start value df/dt	FRPFRQ	-0.2000...0.2000 × f_n/s	0.0001
Operate Tm Freq	FRPFRQ	80...5400000 ms	10
Operate Tm df/dt	FRPFRQ	120...200000 ms	10

104 Valid for voltage measurement range 0.9...1.1 x Un.

105 Applies to sudden frequency change of ≤0.2 Hz or to frequency slope of ≤ 5 Hz/s. When frequency change is outside of these limits, start may be delayed by additional 100 ms to prevent false starts when connecting / disconnecting heavy loads.

26.30.80 Three-phase voltage-dependent overcurrent protection (PHPVOC)

Table 114: Three-phase voltage-dependent overcurrent protection (PHPVOC)

Characteristic	Value
Operation accuracy	Depending on the frequency of the measured current and voltage: f_n ±2 Hz
	Current: ±1.5% of the set value or ± 0.002 × I_n Voltage: ±1.5% of the set value or ±0.002 × U_n
Start time [106, 107]	Typically 26 ms
Reset time	Typically 40 ms
Reset ratio	Typically 0.96
Operate time accuracy in definite time mode	±1.0% of the set value or ±20 ms
Operate time accuracy in inverse time mode	±5.0% of the set value or ±20 ms
Suppression of harmonics	-50 dB at f = n × f_n, where n = 2, 3, 4, 5,…

26.30.81 Three-phase voltage-dependent overcurrent protection (PHPVOC) main settings

Table 115: Three-phase voltage-dependent overcurrent protection (PHPVOC) main settings

Parameter	Function	Value (Range)	Step
Start value	PHPVOC	0.05...5.00 × I_n	0.01
Start value low	PHPVOC	0.05...1.00 × I_n	0.01
Voltage high limit	PHPVOC	0.01...1.00 × U_n	0.01
Voltage low limit	PHPVOC	0.01...1.00 × U_n	0.01
Start value Mult	PHPVOC	0.8...10.0	0.1
Time multiplier	PHPVOC	0.05...15.00	0.01
Operating curve type [108]	PHPVOC	Definite or inverse time Curve type: 1, 2, 3, 4, 5, 6, 7, 8, 9, 10, 11, 12, 13, 14, 15, 17, 18, 19	
Operate delay time	PHPVOC	40...200000 ms	10

106 *Measurement mode* = default, current before fault = 0.0 × I_n, f_n = 50 Hz, fault current in one phase with nominal frequency injected from random phase angle, results based on statistical distribution of 1000 measurements
107 Includes the delay of the signal output contact
108 For further reference, see the Operation characteristics table

26.30.82 Accidental energization protection (GAEPVOC)

Table 116: Accidental energization protection (GAEPVOC)

Characteristic	Value
Operation accuracy	Depending on the frequency of the measured current and voltages: f_n ±2 Hz
	Current: ±1.5% of the set value or ± 0.002 × I_n Voltage: ±1.5% of the set value or ±0.002 × U_n
Start time [109, 110]	Typically 20 ms
Reset time	Typically 35 ms
Reset ratio	Typically 0.96
Operate time accuracy	±1.0% of the set value or ±20 ms
Suppression of harmonics	Voltage: -50 dB at f = n × f_n, where n = 2, 3, 4, 5, … Current: No suppression

26.30.83 Accidental energization protection (GAEPVOC) main settings

Table 117: Accidental energization protection (GAEPVOC) main settings

Parameter	Function	Value (Range)	Step
Start value	GAEPVOC	0.05...9.00 × I_n	0.01
Arm set voltage	GAEPVOC	0.05...1.00 × U_n	0.01
Disarm set voltage	GAEPVOC	0.50...1.50 × U_n	0.01
Operate delay time	GAEPVOC	20...300000 ms	10
Arm delay time	GAEPVOC	40...300000 ms	10
Disarm delay time	GAEPVOC	40...300000 ms	10
Operation	GAEPVOC	1 = on 5 = off	
Reset delay time	GAEPVOC	0...60000 ms	1

109 Results based on statistical distribution of 1000 measurements
110 Includes the delay of the signal output contact.

26.30.84 Overexcitation protection (OEPVPH)

Table 118: Overexcitation protection (OEPVPH)

Characteristic	Value
Operation accuracy	Depending on the frequency of the measured current: f_n ±2 Hz
	±3.0% of the set value
Start time [111]	Frequency change: Typically 200 ms
	Voltage change: Typically 40 ms
Reset time	Typically 40 ms
Reset ratio	Typically 0.96
Retardation time	<35 ms
Operate time accuracy in definite-time mode	±1.0% of the set value or ±20 ms
Operate time accuracy in inverse-time mode	±5.0% of the theoretical value or ±50 ms

26.30.85 Overexcitation protection (OEPVPH) main settings

Table 119: Overexcitation protection (OEPVPH) main settings

Parameter	Function	Value (Range)	Step
Start value	OEPVPH	100...200%	1
Operating curve type [112]	OEPVPH	Definite or inverse time Curve type: 5, 15, 17, 18, 19, 20	
Time multiplier	OEPVPH	0.1...100.0	0.1
Operate delay time	OEPVPH	200...200000 ms	10
Cooling time	OEPVPH	5...10000 s	1

26.30.86 Three-phase thermal protection for feeders, cables and distribution transformers (T1PTTR)

Table 120: Three-phase thermal protection for feeders, cables and distribution transformers (T1PTTR)

Characteristic	Value
Operation accuracy	Depending on the frequency of the measured current: f_n ±2 Hz
	Current measurement: ±1.5% of the set value or ±0.002 × I_n (at currents in the range of 0.01. 4.00 × I_n)
Operate time accuracy [113]	±2.0% of the theoretical value or ±0.50 s

111 Includes the delay of the signal output contact
112 For further reference, see the Operation characteristics table
113 Overload current > 1.2 × Operate level temperature

26.30.87 Three-phase thermal protection for feeders, cables and distribution transformers (T1PTTR) main settings

Table 121: Three-phase thermal protection for feeders, cables and distribution transformers (T1PTTR) main settings

Parameter	Function	Value (Range)	Step
Env temperature Set	T1PTTR	-50...100°C	1
Current reference	T1PTTR	0.05...4.00 × I_n	0.01
Temperature rise	T1PTTR	0.0...200.0°C	0.1
Time constant	T1PTTR	60...60000 s	1
Maximum temperature	T1PTTR	22.0...200.0°C	0.1
Alarm value	T1PTTR	20.0...150.0°C	0.1
Reclose temperature	T1PTTR	20.0...150.0°C	0.1
Current multiplier	T1PTTR	1...5	1
Initial temperature	T1PTTR	-50.0. 100.0°C	0.1

26.30.88 Three-phase thermal overload protection, two time constants (T2PTTR)

Table 122: Three-phase thermal overload protection, two time constants (T2PTTR)

Characteristic	Value
Operation accuracy	Depending on the frequency of the measured current: f_n ±2 Hz
	Current measurement: ±1.5% of the set value or ±0.002 x I_n (at currents in the range of 0.01...4.00 x I_n)
Operate time accuracy [114]	±2.0% of the theoretical value or ±0.50 s

26.30.89 Three-phase thermal overload protection, two time constants (T2PTTR) main settings

Table 123: Three-phase thermal overload protection, two time constants (T2PTTR) main settings

Parameter	Function	Value (Range)	Step
Temperature rise	T2PTTR	0.0...200.0°C	0.1
Max temperature	T2PTTR	0.0...200.0°C	0.1
Operate temperature	T2PTTR	80.0...120.0%	0.1
Short time constant	T2PTTR	6...60000 s	1
Weighting factor p	T2PTTR	0.00...1.00	0.01
Current reference	T2PTTR	0.05...4.00 × I_n	0.01
Operation	T2PTTR	1 = on 5 = off	-

[114] Overload current > 1.2 x Operate level temperature

26.30.90 Three-phase overload protection for shunt capacitor banks (COLPTOC)

Table 124: Three-phase overload protection for shunt capacitor banks (COLPTOC)

Characteristic	Value
Operation accuracy	Depending on the frequency of the measured current: fn ±2 Hz, and no harmonics
	5% of the set value or 0.002 × I_n
Start time for overload stage [115, 116]	Typically 75 ms
Start time for under current stage [80, 117]	Typically 26 ms
Reset time for overload and alarm stage	Typically 60 ms
Reset ratio	Typically 0.96
Operate time accuracy in definite time mode	1% of the set value or ±20 ms
Operate time accuracy in inverse time mode	10% of the theoretical value or ±20 ms
Suppression of harmonics for under current stage	DFT: -50 dB at f = n × f_n, where n = 2,3,4,5,..

26.30.91 Three-phase overload protection for shunt capacitor banks (COLPTOC) main settings

Table 125: Three-phase overload protection for shunt capacitor banks (COLPTOC) main settings

Parameter	Function	Value (Range)	Step
Start value overload	COLPTOC	0.30 1.50 × I_n	0.01
Alarm start value	COLPTOC	80...120%	1
Start value Un Cur	COLPTOC	0.10 0.70 × I_n	0.01
Time multiplier	COLPTOC	0.05...2.00	0.01
Alarm delay time	COLPTOC	500...6000000 ms	100
Un Cur delay time	COLPTOC	100...120000 ms	100

115 Harmonics current before fault = 0.5 × I_n, harmonics fault current 1.5 × *Start value*, results based on statistical distribution of 1000 measurements
116 Includes the delay of the signal output contact
117 Harmonics current before fault = 1.2 × I_n, harmonics fault current 0.8 × *Start value*, results based on statistical distribution of 1000 measurements

26.30.92 Current unbalance protection for shunt capacitor banks (CUBPTOC)

Table 126: Current unbalance protection for shunt capacitor banks (CUBPTOC)

Characteristic	Value
Operation accuracy	Depending on the frequency of the measured current: fn ±2 Hz
Start time [118, 119]	1.5% of the set value or 0.002 × I_n
	Typically 26 ms
Reset time	Typically 40 ms
Reset ratio	Typically 0.96
Operate time accuracy in definite time mode	1% of the theoretical value or ±20 ms
Operate time accuracy in inverse definite minimum time mode	5% of the theoretical value or ±20 ms
Suppression of harmonics	DFT: -50 dB at f = n × f_n, where n = 2,3,4,5,..

26.30.93 Current unbalance protection for shunt capacitor banks (CUBPTOC) main settings

Parameter	Function	Value (Range)	Step
Alarm mode	CUBPTOC	1 = Normal 2 = Element counter	-
Start value	CUBPTOC	0.01...1.00 × I_n	0.01
Alarm start value	CUBPTOC	0.01...1.00 × I_n	0.01
Time multiplier	CUBPTOC	0.05...15.00	0.01
Operating curve type [120]	CUBPTOC	Definite or inverse time Curve type: 1, 2, 3, 4, 5, 6, 7, 8, 9, 10, 11, 12, 13, 14, 15, 17, 18, 19	
Operate delay time	CUBPTOC	50...200000 ms	10
Alarm delay time	CUBPTOC	50...200000 ms	10

26.30.94 Three-phase current unbalance protection for shunt capacitor banks (HCUBPTOC)

Table 127: Three-phase current unbalance protection for shunt capacitor banks (HCUBPTOC)

Characteristic	Value
Operation accuracy	Depending on the frequency of the measured current: f_n ±2 Hz
	1.5% of the set value or 0.002 × I_n

Table continues on the next page

118 Fundamental frequency current = 1.0 × I_n, current before fault = 0.0 × I_n, fault current = 2.0 × *Start value* , results based on statistical distribution of 1000 measurements
119 Includes the delay of the signal output contact
120 For further reference, see the Operating characteristics table

Characteristic	Value
Start time [121, 122]	Typically 26 ms
Reset time	Typically 40 ms
Reset ratio	Typically 0.96
Operate time accuracy in definite time mode	1% of the theoretical value or ±20 ms
Operate time accuracy in IDMT mode	5% of the theoretical value or ±20 ms
Suppression of harmonics	DFT: -50 dB at f = n × fn, where n = 2,3,4,5,..

26.30.95 Three-phase current unbalance protection for shunt capacitor banks (HCUBPTOC) main settings

Table 128: Three-phase current unbalance protection for shunt capacitor banks (HCUBPTOC) main settings

Parameter	Function	Value (Range)	Step
Start value	HCUBPTOC	0.01...1.00 × I_n	0.01
Alarm start value	HCUBPTOC	0.01...1.00 × I_n	0.01
Time multiplier	HCUBPTOC	0.05...15.00	0.01
Operating curve type [123]	HCUBPTOC	Definite or inverse time Curve type: 1, 2, 3, 4, 5, 6, 7, 8, 9, 10, 11, 12, 13, 14, 15, 17, 18, 19	
Operate delay time	HCUBPTOC	40...200000 ms	10
Alarm delay time	HCUBPTOC	40...200000 ms	10

26.30.96 Shunt capacitor bank switching resonance protection, current based (SRCPTOC)

Table 129: Shunt capacitor bank switching resonance protection, current based (SRCPTOC)

Characteristic	Value
Operation accuracy	Depending on the frequency of the measured current: f_n ±2 Hz
	Operate value accuracy: ±3% of the set value or ±0.002 × I_n (for 2nd order Harmonics) ±1.5% of the set value or ±0.002 × I_n (for 3rd order < Harmonics < 10th order) ±6% of the set value or ±0.004 × I_n (for Harmonics >= 10th order)
Reset time	Typically 45 ms or maximum 50 ms
Retardation time	Typically 0.96

Table continues on the next page

121 Fundamental frequency current = 1.0 × I_n, current before fault = 0.0 × I_n, fault current = 2.0 × *Start value* , results based on statistical distribution of 1000 measurements
122 Includes the delay of the signal output contact
123 For further reference, refer to the Operating characteristics table

Characteristic	Value
Retardation time	<35 ms
Operate time accuracy in definite time mode	±1.0% of the set value or ±20 ms
Suppression of harmonics	-50 dB at f = f_n

26.30.97 Shunt capacitor bank switching resonance protection, current based (SRCPTOC) main settings

Table 130: Shunt capacitor bank switching resonance protection, current based (SRCPTOC) main settings

Parameter	Function	Value (Range)	Step
Alarm start value	SRCPTOC	0.03. 0.50 × I_n	0.01
Start value	SRCPTOC	0.03. 0.50 × I_n	0.01
Tuning harmonic Num	SRCPTOC	1...11	1
Operate delay time	SRCPTOC	120...360000 ms	1
Alarm delay time	SRCPTOC	120...360000 ms	1

26.30.98 Compensated neutral unbalance voltage protection (CNUPTOV)

Table 131: Compensated neutral unbalance voltage protection (CNUPTOV)

Characteristic		Value
Operation accuracy		Depending on the frequency of the measured voltage: f_n ±2 Hz
		±1.5% of the set value or ±0.002 × U_n
Start time [124, 125]	U_{Fault} = 1.1 × set Start value	Typically 75 ms
Reset time		Typically 40 ms
Reset ratio		Typically 0.96
Retardation time		<35 ms
Operate time accuracy		±1.0% of the set value or ±20 ms
Suppression of harmonics		DFT: -50 dB at f = n × f_n, where n = 2, 3, 4, 5,…

[124] Start value = 0.1 × U_n, Voltage before fault = 0.9 × U_n, f_n = 50 Hz, overvoltage in one phase-to-earth with nominal frequency injected from random phase angle, results based on statistical distribution of 1000 measurements

[125] Measured with static signal output (SSO)

26.30.99 Compensated neutral unbalance voltage protection (CNUPTOV) main settings

Table 132: Compensated neutral unbalance voltage protection (CNUPTOV) main settings

Parameter	Function	Value (Range)	Step
Start value	CNUPTOV	0.01...1.00 × U_n	0.01
Operate delay time	CNUPTOV	100...300000 ms	100

26.30.100 Phase voltage differential protection for shunt capacitor banks (CPHPTDV)

Table 133: Phase voltage differential protection for shunt capacitor banks (CPHPTDV)

Characteristic	Value
Operation accuracy	Depending on the frequency of the measured current: f_n ±2 Hz
	±1.5 % of the set value or ±0.004 × U_n
Start time [126,127,128]	Min 16 ms Typical 23 ms Max 31 ms
Reset time	Typically 40 ms
Reset ratio	0.96
Operate time accuracy in definite time mode	1 % of the theoretical value or ±20 ms
Operate time accuracy in inverse definite minimum time mode	10 % of the theoretical value or ±20 ms[3]
Suppression of harmonics	DFT: -50 dB at f = n × f_n, where n = 2, 3, 4, 5, …

26.30.101 Phase voltage differential protection for shunt capacitor banks (CPHPTDV) main settings

Table 134: Phase voltage differential protection for shunt capacitor banks (CPHPTDV) main settings

Parameter	Function	Values (Range)	Step
Second VT Loc	CPHPTDV	1=Bus 2=Tap	
Fuse location	CPHPTDV	1=Internal 2=External	
Start value	CPHPTDV	0.01...1.00	0.01

Table continues on the next page

126 Second VT Loc = Bus, Start value = 0.1 × U_n, differential voltage before fault = 0.0, f_n = 50 Hz, results based on statistical distribution of 1000 measurements
127 Measured with static signal output (SSO)t
128 Start value = 0.1 × U_n, Start value multiples in range of 2.0...2.5

Parameter	Function	Values (Range)	Step
Alarm start value	CPHPTDV	0.01...1.00	0.01
Time multiplier	CPHPTDV	0.025...15.000	0.005
Tap ratio	CPHPTDV	2.00...98.00	0.01
Operating curve type	CPHPTDV	5=ANSI Def. Time 15=IEC Def. Time 17=Inv. Curve A 18=Inv. Curve B 19=Inv. Curve C 20=Programmable	
Alarm delay time	CPHPTDV	40...300000	10
Operate delay time	CPHPTDV	20...300000	10

26.30.102 Directional negative-sequence overcurrent protection (DNSPDOC)

Table 135: Directional negative-sequence overcurrent protection (DNSPDOC)

Characteristic		Value		
Operation accuracy		Depending on the frequency of the measured current: f_n ±2 Hz		
		Current: ±1.5% of the set value or ±0.002 × I_n Voltage: ±1.5% of the set value or ±0.002 × U_n Phase angle: ±2°		
Start time [129, 130]	I_{Fault} = 2 × set *Start value*	Minimum	Typical	Maximum
		31 ms	34 ms	37 ms
Reset time		Typically 40 ms		
Reset ratio		Typically 0.96		
Retardation time		<35 ms		
Operate time accuracy in definite time mode		±1.0% of the set value or ±20 ms		
Suppression of harmonics		RMS: No suppression DFT: -50 dB at f = n × f_n, where n = 2, 3, 4, 5,… Peak-to-Peak: No suppression		

129 Measurement mode NPS, NPS current before fault = 0.0 × I_n, f_n = 50 Hz, fault NPS current with nominal frequency injected from random phase angle, results based on statistical distribution of 1000 measurements

130 Measured with static signal output (SSO)

26.30.103 Directional negative-sequence overcurrent protection (DNSPDOC) main settings

Table 136: Directional negative-sequence overcurrent protection (DNSPDOC) main settings

Parameter	Function	Value (Range)	Step
Start value	DNSPDOC	0.05...5.00 × I_n	0.01
Directional mode	DNSPDOC	1 = Non-directional 2 = Forward 3 = Reverse	-
Operate delay time	DNSPDOC	40...300000 ms	10
Characteristic angle	DNSPDOC	-179...180°	1

26.30.104 Low-voltage ride-through protection (LVRTPTUV)

Table 137: Low-voltage ride-through protection (LVRTPTUV)

Characteristic	Value
Operation accuracy	Depending on the frequency of the measured voltage: f_n ±2 Hz
	±1.5% of the set value or ±0.002 × U_n
Start time [131, 132]	Typically 40 ms
Reset time	Based on maximum value of *Recovery time* setting
Operate time accuracy	±1.0% of the set value or ±20 ms
Suppression of harmonics	DFT: -50 dB at f = n × f_n, where n = 2, 3, 4, 5,...

26.30.105 Low-voltage ride-through protection (LVRTPTUV) main settings

Table 138: Low-voltage ride-through protection (LVRTPTUV) main settings

Parameter	Function	Value (Range)	Step
Voltage start value	LVRTPTUV	0.05. 1.20 × U_n	0.01
Num of start phases	LVRTPTUV	4 = Exactly 1 of 3 5 = Exactly 2 of 3 6 = Exactly 3 of 3	-
Voltage selection	LVRTPTUV	1 = Highest Ph-to-E 2 = Lowest Ph-to-E 3 = Highest Ph-to-Ph 4 = Lowest Ph-to-Ph 5 = Positive Seq	-

Table continues on the next page

131 Tested for *Number of Start phases* = 1 out of 3, results based on statistical distribution of 1000 measurements

132 Includes the delay of the signal output contact

Parameter	Function	Value (Range)	Step
Active coordinates	LVRTPTUV	1...10	1
Voltage level 1	LVRTPTUV	0.00 1.20 xU_n	0.01
Voltage level 2	LVRTPTUV	0.00 1.20 xU_n	0.01
Voltage level 3	LVRTPTUV	0.00 1.20 xU_n	0.01
Voltage level 4	LVRTPTUV	0.00 1.20 xU_n	0.01
Voltage level 5	LVRTPTUV	0.00 1.20 xU_n	0.01
Voltage level 6	LVRTPTUV	0.00 1.20 xU_n	0.01
Voltage level 7	LVRTPTUV	0.00 1.20 xU_n	0.01
Voltage level 8	LVRTPTUV	0.00 1.20 xU_n	0.01
Voltage level 9	LVRTPTUV	0.00 1.20 xU_n	0.01
Voltage level 10	LVRTPTUV	0.00 1.20 xU_n	0.01
Recovery time 1	LVRTPTUV	0...300000 ms	1
Recovery time 2	LVRTPTUV	0...300000 ms	1
Recovery time 3	LVRTPTUV	0...300000 ms	1
Recovery time 4	LVRTPTUV	0...300000 ms	1
Recovery time 5	LVRTPTUV	0...300000 ms	1
Recovery time 6	LVRTPTUV	0...300000 ms	1
Recovery time 7	LVRTPTUV	0...300000 ms	1
Recovery time 8	LVRTPTUV	0...300000 ms	1
Recovery time 9	LVRTPTUV	0...300000 ms	1
Recovery time 10	LVRTPTUV	0...300000 ms	1

26.30.106 Voltage vector shift protection (VVSPPAM)

Table 139: Voltage vector shift protection (VVSPPAM)

Characteristic	Value
Operation accuracy	Depending on the frequency of the measured voltage: f_n ±1 Hz
	±1°
Operate time [133, 134]	Typically 53 ms

[133] f_n = 50 Hz, results based on statistical distribution of 1000 measurements
[134] Includes the delay of the signal output contact

26.30.107 Voltage vector shift protection (VVSPPAM) main settings

Table 140: Voltage vector shift protection (VVSPPAM) main settings

Parameter	Function	Value (Range)	Step
Start value	VVSPPAM	2.0...30.0°	0.1
Over Volt Blk value	VVSPPAM	0.40 1.50 × U_n	0.01
Under Volt Blk value	VVSPPAM	0.15. 1.00 × U_n	0.01
Phase supervision	VVSPPAM	7 = Ph A + B + C 8 = Pos sequence	-

26.30.108 Directional reactive power undervoltage protection (DQPTUV)

Table 141: Directional reactive power undervoltage protection (DQPTUV)

Characteristic	Value
Operation accuracy	Depending on the frequency of the measured current and voltage: f_n ±2 Hz Reactive power range |PF| <0.71
	Power: ±3.0% or ±0.002 × Q_n Voltage: ±1.5% of the set value or ±0.002 × U_n
Start time [135, 136]	Typically 46 ms
Reset time	<50 ms
Reset ratio	Typically 0.96
Operate time accuracy	±1.0% of the set value or ±20 ms
Suppression of harmonics	DFT: -50 dB at f = n × f_n, where n = 2, 3, 4, 5,...

26.30.109 Directional reactive power undervoltage protection (DQPTUV) main settings

Table 142: Directional reactive power undervoltage protection (DQPTUV) main settings

Parameter	Function	Value (Range)	Step
Voltage start value	DQPTUV	0.20 1.20 × U_n	0.01
Operate delay time	DQPTUV	100...300000 ms	10
Min reactive power	DQPTUV	0.01. 0.50 × S_n	0.01
Min Ps Seq current	DQPTUV	0.02. 0.20 × I_n	0.01
Pwr sector reduction	DQPTUV	0...10°	1

135 *Start value* = 0.05 × S_n, reactive power before fault = 0.8 × *Start value*, reactive power overshoot 2 times, results based on statistical distribution of 1000 measurements

136 Includes the delay of the signal output contact

26.30.110 Reverse power/directional overpower protection (DOPPDPR)

Table 143: Reverse power/directional overpower protection (DOPPDPR)

Characteristic	Value
Operation accuracy [137]	Depending on the frequency of the measured current and voltage: $f = f_n \pm 2$ Hz
	Power measurement accuracy ±3% of the set value or ±0.002 × S_n Phase angle: ±2°
Start time [138, 139]	Typically 45 ms
Reset time	Typically 30 ms
Reset ratio	Typically 0.94
Operate time accuracy	±1.0% of the set value of ±20 ms
Suppression of harmonics	-50 dB at f = n × f_n, where n = 2, 3, 4, 5,…

26.30.111 Reverse power/directional overpower protection (DOPPDPR) main settings

Table 144: Reverse power/directional overpower protection (DOPPDPR) main settings

Parameter	Function	Value (Range)	Step
Start value	DOPPDPR	0.01...2.00 × S_n	0.01
Operate delay time	DOPPDPR	40...300000 ms	10
Directional mode	DOPPDPR	2 = Forward 3 = Reverse	-
Power angle	DOPPDPR	-90...90°	1

[137] *Measurement mode* = “Pos Seq” (default)
[138] U = U_n, f_n = 50 Hz, results based on statistical distribution of 1000 measurements
[139] Includes the delay of the signal output contact

26.30.112 Underpower protection (DUPPDPR)

Table 145: Underpower protection (DUPPDPR)

Characteristic	Value
Operation accuracy [140]	Depending on the frequency of the measured current and voltage: f_n ±2 Hz
	Power measurement accuracy ±3% of the set value or ±0.002 × S_n Phase angle: ±2°
Start time [141, 142]	Typically 45 ms
Reset time	Typically 30 ms
Reset ratio	Typically 1.04
Operate time accuracy	±1.0% of the set value of ±20 ms
Suppression of harmonics	-50 dB at f = n × f_n, where n = 2, 3, 4, 5,…

26.30.113 Underpower protection (DUPPDPR) main settings

Table 146: Underpower protection (DUPPDPR) main settings

Parameter	Function	Value (Range)	Step
Start value	DUPPDPR	0.01. 2.00 × S_n	0.01
Operate delay time	DUPPDPR	40...300000 ms	10
Pol reversal	DUPPDPR	0 = False 1 = True	-
Disable time	DUPPDPR	0...60000 ms	1000

26.30.114 Three-phase underimpedance protection (UZPDIS)

Table 147: Three-phase underimpedance protection (UZPDIS)

Characteristic	Value
Operation accuracy	Depending on the frequency of the measured current and voltage: f_n ±2 Hz
	±3.0% of the set value or ±0.2 %Zb
Start time [143, 144]	Typically 50 ms
Reset time	Typically 40 ms
Reset ratio	Typically 1.04
Retardation time	<40 ms
Operate time accuracy	±1.0% of the set value or ±20 ms

140 *Measurement mode* = “Pos Seq” (default)
141 U = U_n, f_n = 50 Hz, results based on statistical distribution of 1000 measurements
142 Includes the delay of the signal output contact
143 f_n = 50 Hz, results based on statistical distribution of 1000 measurements
144 Includes the delay of the signal output contact

26.30.115 Three-phase underimpedance protection (UZPDIS) main settings

Table 148: Three-phase underimpedance protection (UZPDIS) main settings

Parameter	Function	Value (Range)	Step
Percentage reach	UZPDIS	1...6000% Z_n	1
Operate delay time	UZPDIS	40...200000 ms	10

26.30.116 Three-phase underexcitation protection (UEXPDIS)

Table 149: Three-phase underexcitation protection (UEXPDIS)

Characteristic	Value
Operation accuracy	Depending on the frequency of the measured current and voltage: $f = f_n \pm 2$ Hz
	±3.0% of the set value or ±0.2% Zb
Start time [145, 146]	Typically 45 ms
Reset time	Typically 30 ms
Reset ratio	Typically 1.04
Retardation time	Total retardation time when the impedance returns from the operating circle <40 ms
Operate time accuracy	±1.0% of the set value or ±20 ms
Suppression of harmonics	-50 dB at $f = n \times f_n$, where n = 2, 3, 4, 5,…

26.30.117 Three-phase underexcitation protection (UEXPDIS) main settings

Table 150: Three-phase underexcitation protection (UEXPDIS) main settings

Parameter	Function	Value (Range)	Step
Diameter	UEXPDIS	1...6000 %Z_n	1
Offset	UEXPDIS	-1000...1000 %Z_n	1
Displacement	UEXPDIS	-1000...1000 %Z_n	1
Operate delay time	UEXPDIS	60...200000 ms	10
External Los Det Ena	UEXPDIS	0 = Disable 1 = Enable	-

145 f_n= 50Hz, results based on statistical distribution of 1000 measurements
146 Includes the delay of the signal output contact

26.30.118 Third harmonic-based stator earth-fault protection (H3EFPSEF)

Table 151: Third harmonic-based stator earth-fault protection (H3EFPSEF)

Characteristic	Value
Operation accuracy	Depending on the frequency of the measured voltage: f_n ±2 Hz
	±5% of the set value or ±0.004 × U_n
Start time [147, 148]	Typically 35 ms
Reset time	Typically 35 ms
Reset ratio	Typically 0.96 (differential mode) Typically 1.04 (under voltage mode)
Operate time accuracy	±1.0% of the set value of ±20 ms

26.30.119 Third harmonic-based stator earth-fault protection (H3EFPSEF) main settings

Table 152: Third harmonic-based stator earth-fault protection (H3EFPSEF) main settings

Parameter	Function	Value (Range)	Step
Beta	H3EFPSEF	0.50...10.00	0.01
Voltage N 3.H Lim	H3EFPSEF	0.005. 0.200 × U_n	0.001
Operate delay time	H3EFPSEF	20...300000 ms	10
Voltage selection	H3EFPSEF	1 = No voltage 2 = Measured Uo 3 = Calculated Uo 4 = Phase A 5 = Phase B 6 = Phase C	-
CB open factor	H3EFPSEF	1.00...10.00	0.01

26.30.120 Rotor earth-fault protection, injection method (MREFPTOC)

Table 153: Rotor earth-fault protection, injection method (MREFPTOC)

Characteristic	Value
Operation accuracy	Depending on the frequency of the current measured: f_n ±2 Hz
	±1.5% of the set value or ±0.002 × I_n

Table continues on the next page

147 f_n = 50 Hz, results based on statistical distribution of 1000 measurements
148 Includes the delay of the signal output contact

Characteristic		Value		
Start time [149, 150]	I_{Fault} = 1.2 × set *Start value*	Minimum	Typical	Maximum
		30 ms	34 ms	38 ms
Reset time		<50 ms		
Reset ratio		Typically 0.96		
Retardation time		<50 ms		
Operate time accuracy		±1.0% of the set value of ±20 ms		
Suppression of harmonics		-50 dB at f = n × fn, where n = 2, 3, 4, 5,…		

26.30.121 Rotor earth-fault protection, injection method (MREFPTOC) main settings

Table 154: Rotor earth-fault protection, injection method (MREFPTOC) main settings

Parameter	Function	Value (Range)	Step
Operate start value	MREFPTOC	0.010...2.000 × I_n	0.001
Alarm start value	MREFPTOC	0.010...2.000 × I_n	0.001
Operate delay time	MREFPTOC	40...20000 ms	1
Alarm delay time	MREFPTOC	40...200000 ms	1

26.30.122 High-impedance or flux-balance based differential protection (MHZPDIF)

Table 155: High-impedance or flux-balance based differential protection (MHZPDIF)

Characteristic		Value		
Operation accuracy		Depending on the frequency of the measured current: f_n ±2 Hz		
		±1.5% of the set value or 0.002 × I_n		
Start time [151, 152]	I_{Fault} = 2.0 × set *Start Value* (one phase fault)	Minimum	Typical	Maximum
		13 ms	17 ms	21 ms
	I_{Fault} = 2.0 × set *Start Value* (three phases fault)	11 ms	14 ms	17 ms
Reset time		<40 ms		

Table continues on the next page

149 Current before fault = 0.0 × I_n, f_n = 50 Hz, earth-fault current with nominal frequency injected from random phase angle, results based on statistical distribution of 1000 measurements
150 Includes the delay of the signal output contact
151 Measurement mode = “Peak-to-Peak”, current before fault = 0.0 × I_n, f_n = 50 Hz, fault current with nominal frequency injected from random phase angle, results based on statistical distribution of 1000 measurements
152 Includes the delay of the signal output contact

Characteristic	Value
Reset ratio	Typically 0.96
Retardation time	<35 ms
Operate time accuracy in definite time mode	±1.0% of the set value of ±20 ms

26.30.123 High-impedance or flux-balance based differential protection (MHZPDIF) main settings

Table 156: High-impedance or flux-balance based differential protection (MHZPDIF) main settings

Parameter	Function	Value (Range)	Step
Operate value	MHZPDIF	0.5...50.0 %I_n	0.1
Minimum operate time	MHZPDIF	20...300000 ms	10

26.30.124 Cable end protection (CEPNDF)

Table 157: Cable end protection (CEPNDF)

Characteristic	Value
Operation accuracy	Depending on the frequency of the measured current: f_n ±2 Hz
	±2.5% of the set value or ±0.004 x I_n
Start time [153,154]	Typically 40 ms I Fault = 2.0 × set *Start value*
Reset time	Typically 40 ms
Reset ratio	Typically 0.96
Retardation time	<35 ms
Operate time accuracy in definite time mode	±1.0% of the set value or ±20 ms
Suppression of harmonics	DFT: -50 dB at f = n × f_n, where n = 2, 3, 4, 5, …

26.30.125 Cable end protection (CEPNDF) main settings

Table 158: Cable end protection (CEPNDF) main settings

Parameter	Function	Values (Range)	Step
Start value	CEPNDF	5.0...50.0	1.0
Voltage start value	CEPNDF	0.010...1.000	0.001

Table continues on the next page

153 Current before fault = 0.0, f_n = 50 Hz, results based on statistical distribution of 1000 measurements

154 Includes the delay of the signal output contact

Parameter	Function	Values (Range)	Step
Enable voltage limit	CEPNDF	0=False 1=True	
Operate delay time	CEPNDF	40...300000	1

26.30.126 Out-of-step protection with double blinders (OOSRPSB)

Table 159: Out-of-step protection with double blinders (OOSRPSB)

Characteristic	Value
Impedance reach	Depending on the frequency of the measured current and voltage: f_n ±2 Hz
	±3.0% of the reach value or ±0.2% of $U_n/(\sqrt{3} * I_n)$
Reset time	±1.0% of the set value or ±40 ms
Operate time accuracy	±1.0% of the set value or ±20 ms
Suppression of harmonics	DFT: -50 dB at f = n × f_n, where n = 2, 3, 4, 5...

26.30.127 Out-of-step protection (OOSRPSB) main settings

Table 160: Out-of-step protection (OOSRPSB) main settings

Parameter	Function	Value (Range)	Step
Oos operate mode	OOSRPSB	1 = Way in 2 = Way out 2 = Way out 3 = Adaptive	-
Forward reach	OOSRPSB	0.00...6000.00 Ω	0.01
Reverse reach	OOSRPSB	0.00...6000.00 Ω	0.01
Inner blinder R	OOSRPSB	1.00...6000.00 Ω	0.01
Outer blinder R	OOSRPSB	1.01...10000.00 Ω	0.01
Impedance angle	OOSRPSB	10.0...90.0°	0.1
Swing time	OOSRPSB	20...300000 ms	10
Zone 1 reach	OOSRPSB	1...100%	1
Operate delay time	OOSRPSB	20...60000 ms	10

26.30.128 Negative-sequence overcurrent protection for machines (MNSPTOC)

Table 161: Negative-sequence overcurrent protection for machines (MNSPTOC)

Characteristic		Value		
Operation accuracy		Depending on the frequency of the measured current: f_n		
		±1.5% of the set value or ±0.002 × I_n		
Start time [155, 156]		Minimum	Typical	Maximum
	I_{Fault} = 2.0 × set *Start value*	23	25 ms	28 ms
Reset time		Typically 40 ms		
Reset ratio		Typically 0.96		
Retardation time		<35 ms		
Operate time accuracy in definite time mode		±1.0% of the set value or ±20 ms		
Operate time accuracy in inverse time mode		±5.0% of the theoretical value or ±20 ms [157]		
Suppression of harmonics		DFT: -50 dB at f = n × f_n, where n = 2, 3, 4, 5,…		

26.30.129 Negative-sequence overcurrent protection for machines (MNSPTOC) main settings

Table 162: Negative-sequence overcurrent protection for machines (MNSPTOC) main settings

Parameter	Function	Value (Range)	Step
Start value	MNSPTOC	0.01. 0.50 × I_n	0.01
Operating curve type	MNSPTOC	Definite or inverse time Curve type: 5, 15, 17, 18	
Operate delay time	MNSPTOC	100...120000 ms	10
Operation	MNSPTOC	1 = on 5 = off	-
Cooling time	MNSPTOC	5...7200 s	1

26.30.130 Circuit breaker pole discrepancy protection (CBPDSC)

Table 163: Circuit breaker pole discrepancy protection (CBPDSC)

Characteristic	Value
Operation accuracy	Depending on the frequency of the measured current: f_n ±1.5% of the set value or ±0.002 × I_n
Start time	Typically 25 ms

Table continues on the next page

155 Negative-sequence current before = 0.0, f_n = 50 Hz, results based on statistical distribution of 1000 measurements
156 Includes the delay of the signal output contact
157 *Start value* multiples in range of 1.10...5.00

Characteristic	Value
Reset time	Typically 25 ms
Reset ratio	Typically 0.96
Operate time accuracy	±1.0% of the set value or ±20 ms
Suppression of harmonics	-50 dB at f = n × f_n, where n = 2, 3, 4, 5, …

26.30.131 Circuit breaker pole discrepancy protection (CBPDSC) main settings

Table 164: Circuit breaker pole discrepancy protection (CBPDSC) main settings

Parameter	Function	Values (Range)	Step
Ng seq A start value	CBPDSC	0.01...5.00	0.01
Dsc general Op delay	CBPDSC	0...60000	1
Dsc 1 pole Op delay	CBPDSC	0...60000	1
Dsc 2 pole Op delay	CBPDSC	0...60000	1

26.30.132 Loss of phase, undercurrent (PHPTUC)

Table 165: Loss of phase, undercurrent (PHPTUC)

Characteristic	Value
Operation accuracy	Depending on the frequency of the measured current: f_n ±2 Hz
	±1.5% of the set value or ±0.002 × I_n
Start time	Typically <55 ms
Reset time	<40 ms
Reset ratio	Typically 1.04
Retardation time	<35 ms
Operate time accuracy in definite time mode	mode ±1.0% of the set value or ±20 ms

26.30.133 Loss of phase, undercurrent (PHPTUC) main settings

Table 166: Loss of phase, undercurrent (PHPTUC) main settings

Parameter	Function	Value (Range)	Step
Current block value	PHPTUC	0.00...0.50 × I_n	0.01
Start value	PHPTUC	0.01...1.00 × I_n	0.01
Operate delay time	PHPTUC	50...200000 ms	10

26.30.134 Loss of load supervision (LOFLPTUC)

Table 167: Loss of load supervision (LOFLPTUC)

Characteristic	Value
Operation accuracy	Depending on the frequency of the measured current: f_n ±2 Hz
	±1.5% of the set value or ±0.002 × I_n
Start time	Typically 300 ms
Reset time	Typically 40 ms
Reset ratio	Typically 1.04
Retardation time	<35 ms
Operate time accuracy in definite time mode	±1.0% of the set value or ±20 ms

26.30.135 Loss of load supervision (LOFLPTUC) main settings

Table 168: Loss of load supervision (LOFLPTUC) main settings

Parameter	Function	Value (Range)	Step
Start value low	LOFLPTUC	0.01. 0.50 × I n	0.01
Start value high	LOFLPTUC	0.01. 1.00 × I n	0.01
Operate delay time	LOFLPTUC	400...600000 ms	10
Operation	LOFLPTUC	1 = on 5 = off	-

26.30.136 Motor load jam protection (JAMPTOC)

Table 169: Motor load jam protection (JAMPTOC)

Characteristic	Value
Operation accuracy	Depending on the frequency of the measured current: f_n ±2 Hz
	±1.5% of the set value or ±0.002 × I_n
Reset time	Typically 40 ms
Reset ratio	Typically 0.96
Retardation time	<35 ms
Operate time accuracy in definite time mode	±1.0% of the set value or ±20 ms

26.30.137 Motor load jam protection (JAMPTOC) main settings

Table 170: Motor load jam protection (JAMPTOC) main settings

Parameter	Function	Value (Range)	Step
Operation	JAMPTOC	1 = on 5 = off	-
Start value	JAMPTOC	0.10...10.00 × I_n	0.01
Operate delay time	JAMPTOC	100...120000 ms	10

26.30.138 Motor start-up supervision (STTPMSU)

Table 171: Motor start-up supervision (STTPMSU)

Characteristic		Value		
Operation accuracy		Depending on the frequency of the measured current: f_n ±2 Hz		
		±1.5% of the set value or ±0.002 × I_n		
Start time [158, 159]		Minimum	Typical	Maximum
	I_{Fault} = 1.1 × set *Start detection A*	27 ms	30 ms	34 ms
Operate time accuracy		±1.0% of the set value or ±20 ms		
Reset ratio		Typically 0.90		

26.30.139 Motor start-up supervision (STTPMSU) main settings

Table 172: Motor start-up supervision (STTPMSU) main settings

Parameter	Function	Value (Range)	Step
Motor start-up A	STTPMSU	1.0 10.0 × I_n	0.1
Motor start-up time	STTPMSU	1...80 s	1
Lock rotor time	STTPMSU	2...120 s	1
Operation	STTPMSU	1 = on 5 = off	-
Operation mode	STTPMSU	1 = IIt 2 = IIt, CB 3 = IIt + stall 4 = IIt + stall, CB	-
Restart inhibit time	STTPMSU	0...250 min	1

26.30.140 MSCPMRI Group settings (Basic)

Table 173: MSCPMRI Group settings (Basic)

Parameter	Function	Value (Range)	Step
Warm start level	MSCPMRI	20.0...100.0%	0.1
Max Num cold start	MSCPMRI	1...10	1
Max Num warm start	MSCPMRI	1...10	1

158 Current before = 0.0 × I_n, f_n = 50 Hz, overcurrent in one phase, results based on statistical distribution of 1000 measurements

159 Includes the delay of the signal output contact

26.30.141 Phase reversal protection (PREVPTOC)

Table 174: Phase reversal protection (PREVPTOC)

Characteristic		Value		
Operation accuracy		Depending on the frequency of the measured current: f_n ±2 Hz		
		±1.5% of the set value or ±0.002 × I_n		
Start time [160, 161]		Minimum	Typical	Maximum
	I_{Fault} = 2.0 × set *Start value*	23 ms	25 ms	28 ms
Reset time		Typically 40 ms		
Reset ratio		Typically 0.96		
Retardation time		<35 ms		
Operate time accuracy in definite time mode		±1.0% of the set value or ±20 ms		
Suppression of harmonics		DFT: -50 dB at f = n × f_n, where n = 2, 3, 4, 5,…		

26.30.142 Phase reversal protection (PREVPTOC) main settings

Table 175: Phase reversal protection (PREVPTOC) main settings

Parameter	Function	Value (Range)	Step
Start value	PREVPTOC	0.05. 1.00 x I_n	0.01
Operate delay time	PREVPTOC	100...60000 ms	10
Operation	PREVPTOC	1 = on 5 = off	-

26.30.143 Thermal overload protection for motors (MPTTR)

Table 176: Thermal overload protection for motors (MPTTR)

Characteristic	Value
Operation accuracy	Depending on the frequency of the measured current: f_n ±2 Hz
	Current measurement: ±1.5% of the set value or ±0.002 × I_n (at currents in the range of 0.01...4.00 × I_n)
Operate time accuracy [162, 163]	±2.0% of the theoretical value or ±0.50 s

160 Negative-sequence current before = 0.0, f_n = 50 Hz, results based on statistical distribution of 1000 measurements

161 Includes the delay of the signal output contact

162 Overload current > 1.2 × Operate level temperature

163 In case ambient temperature is measured using AMB_TEMP input, or stator temperature measured using STAT_TEMP input, the accuracy of the temperature measurement has effect to the accuracy of the calculated thermal level. This introduces additional error to the operating time as well.

26.30.144 Thermal overload protection for motors (MPTTR) main settings

Table 177: Thermal overload protection for motors (MPTTR) main settings

Parameter	Function	Value (Range)	Step
Overload factor	MPTTR	1.00...1.20	0.01
Alarm thermal value	MPTTR	50.0...100.0%	0.1
Restart thermal Val	MPTTR	20.0...80.0%	0.1
Weighting factor p	MPTTR	20.0...100.0%	0.1
Time constant normal	MPTTR	80...4000 s	1
Time constant start	MPTTR	80...4000 s	1
Env temperature mode	MPTTR	1 = FLC Only 2 = Use input 3 = Set Amb Temp	-
Env temperature Set	MPTTR	-20.0...70.0°C	0.1
Operation	MPTTR	1 = on 5 = off	-

26.30.145 Thermal overload protection for rotors (RPTTR)

Table 178: Thermal overload protection for rotors (RPTTR)

Characteristics	Value
Operation accuracy	Depending on the frequency of the measured current fn ±2 Hz
	Current measurement ±1.5% of the set value or ±0.002 x I_n (at currents in the range of ≤4.00 x I_n)
Operate time accuracy	±2.0% of the theoretical value or ±0.50 s

26.30.146 Thermal overload protection for rotors (RPTTR) main settings

Table 179: Thermal overload protection for rotors (RPTTR) main settings

Parameter	Function	Value (Range)	Step
Time constant normal	RPTTR	80...10000 s	1
Time constant start	RPTTR	80...10000 s	1
Time constant stop	RPTTR	80...60000 s	1
Alarm value	RPTTR	50.0...100.0 %	0.1
Restart thermal Val	RPTTR	20.0...80.0 %	0.1
Weighting factor p	RPTTR	20.0...100.0 %	0.1
Overload factor	RPTTR	1.00...1.20	0.01

Table continues on the next page

Parameter	Function	Value (Range)	Step
Env temperature Set	RPTTR	-20.0...70.0 °C	0.1
Env temperature mode	RPTTR	1=FLC Only 2=Use input 3=Set Amb Temp	
Motor synchronous speed	RPTTR	125...3600	1
Motor nominal speed	RPTTR	100...3599	1

26.30.147 Directional negative sequence impedance protection (DNZPDIS)

Table 180: DNZPDIS Technical data

Characteristics	Value
Operation accuracy	At the frequency f = f_n
	±3% of the set value or ±0.05 Ω (When |∠Z_2 - ∠RCA| is outside 80 to 100 degree)
Start time [164, 165, 166]	<75 ms
Operate time accuracy[167]	±1.0% of the set value or ±20 ms
Reset ratio	0.96
Reset time	Typically 30 ms

26.30.148 Directional negative sequence impedance protection (DNZPDIS) main settings

Table 181: Directional negative sequence impedance protection (DNZPDIS) main settings

Parameter	Function	Value (Range)	Step
Direction mode	DNZPDIS	1=Non-directional 2=Forward 3=Reverse	
Operate delay time	DNZPDIS	60...300000 ms	10
Ng Seq impedance Fw	DNZPDIS	0.01...3000.00 ohm	0.01
Ng Seq impedance Rv	DNZPDIS	-3000...-0.01 ohm	0.01
Characteristic angle	DNZPDIS	1...90 deg	1

164 Results based on statistical distribution of 1000 measurements
165 Measured with static signal output (SSO)
166 During fault, Z_2= 2.0 × *Ng Seq impedance Rv/Fw*
167 During fault, Z_2= 2.0 × *Ng Seq impedance Rv/Fw*

26.30.149 Power swing detection (DSTRPSB)

Table 182: Power swing detection (DSTRPSB)

Characteristic	Value
Operation accuracy	At the frequency f = fn
	Current: ±1.5% of the set value or ±0.002 × I_n Impedance: ±3% of the set value or ±0.05 Ω Phase angle: ±2°
Reset ratio	Typically 0.96/1.04
Operate time accuracy[168]	± 1.0% of the set value or 20 ms

26.30.150 Power swing detection (DSTRPSB) main settings

Table 183: Power swing detection (DSTRPSB) main settings

Parameter	Function	Value (Range)	Step
Swing time	DSTRPSB	20...300000 ms	10
Inner R1	DSTRPSB	0.01...5999.99 ohm	0.01
Inner X1	DSTRPSB	0.01...5999.99 ohm	0.01
Inner X1 reverse	DSTRPSB	0.01...5999.99 ohm	0.01
Inner Min Ris Rch	DSTRPSB	0.01...5999.99 ohm	0.01
Outer R1	DSTRPSB	0.02...6000 ohm	0.01
Outer X1	DSTRPSB	0.02...6000 ohm	0.01
Outer X1 reverse	DSTRPSB	0.02...6000 ohm	0.01
Outer Min Ris Rch	DSTRPSB	0.02...6000 ohm	0.01
Max Ng Seq current	DSTRPSB	0.01...10 xIn	0.01
Ng Seq current time	DSTRPSB	20...1000 ms	10
Slow swing time	DSTRPSB	80...60000 ms	10
Pulse time	DSTRPSB	20...60000 ms	10
Pe Swg impedance Chr	DSTRPSB	1=Quadrilateral 2=Mho (circular)	

[168] Measured with static power output (SPO)

26.30.151 Stabilized and instantaneous differential protection for machines (MPDIF)

Table 184: Stabilized and instantaneous differential protection for machines (MPDIF)

Characteristic		Value		
Operation accuracy		Depending on the frequency of the current measured: f_n ±2 Hz		
		±3% of the set value or ±0.002 x I_n		
Operate time [169, 170]		Minimum	Typical	Maximum
	Low stage	36 ms	40 ms	42 ms
	High stage	18 ms	22 ms	27 ms
Reset time		<40 ms		
Reset ratio		Typically 0.95		
Retardation time		<20 ms		

26.30.152 Stabilized and instantaneous differential protection for machines (MPDIF) main settings

Table 185: Stabilized and instantaneous differential protection for machines (MPDIF) main settings

Parameter	Function	Value (Range)	Step
Low operate value	MPDIF	5...30 %Ir	1
High operate value	MPDIF	100...1000 %Ir	10
Slope section 2	MPDIF	10...50%	1
End section 1	MPDIF	0...100 %Ir	1
End section 2	MPDIF	100...300 %Ir	1
DC restrain enable	MPDIF	0 = False 1 = True	-
CT connection type	MPDIF	1 = Type 1 2 = Type 2	-
CT ratio Cor Line	MPDIF	0.40...4.00	0.01
CT ratio Cor Neut	MPDIF	0.40...4.00	0.01

26.30.153 Underpower factor protection (MPUPF)

Table 186: Underpower factor protection (MPUPF)

Characteristic	Value
Operation accuracy	Dependent on the frequency of the current measured: fn ±2 Hz
	±0.018 for power factor
Operate time accuracy	±(1.0% or 30 ms)
Suppression of harmonics	DFT: -50 dB at f = n × f_n, where n = 2, 3, 4, 5, 6, 7
Reset time	<40 ms

169 F_n = 50 Hz, results based on statistical distribution of 1000 measurements
170 Includes the delay of the power output contact

26.30.154 Underpower factor protection (MPUPF) main settings

Table 187: Underpower factor protection (MPUPF) main settings

Parameter	Function	Value (Range)	Step
Min operate current	MPUPF	0.05...0.65 × I_n	0.01
Min operate voltage	MPUPF	0.05...0.50 × U_n	0.01
Disable time	MPUPF	0...60000 ms	1
Voltage reversal	MPUPF	0 = No 1 = Yes	-

26.30.155 Stabilized and instantaneous differential protection for two- or three-winding transformers (TR3PTDF)

Table 188: Stabilized and instantaneous differential protection for two- or three-winding transformers (TR3PTDF)

Characteristic		Value		
Operation accuracy		Depending on the frequency of the measured current: f_n ±2 Hz		
		±3.0% of the set value or ±0.002 × I_n		
Start time [171, 172]	Low stage High stage	Minimum	Typical	Maximum
		30 ms 17 ms	35 ms 18 ms	40 ms 20 ms
Reset time		Typically 40 ms		
Reset ratio		Typically 0.96		
Suppression of harmonics		DFT: -50 dB at f = n × f_n, where n = 2, 3, 4, 5...		

26.30.156 Stabilized and instantaneous differential protection for two- or three-winding transformers (TR3PTDF) main settings

Table 189: Stabilized and instantaneous differential protection for two- or three-winding transformers (TR3PTDF) main settings

Parameter	Function	Value (Range)	Step
High operate value	TR3PTDF	500...3000 %Ir	10
Low operate value	TR3PTDF	5...50 %Ir	1
Slope section 2	TR3PTDF	10...50%	1
End section 2	TR3PTDF	100...500 %Ir	1

Table continues on the next page

171 Current before fault = 0.0 × $I_n f_n$ = 50 Hz. Injected differential current = 2.0 × set operation value.
172 Measured with static power output (SPO)

Parameter	Function	Value (Range)	Step
Restraint mode	TR3PTDF	5 = Waveform 6 = 2.h + waveform 8 = 5.h + waveform 9 = 2.h + 5.h + wav	-
Start value 2.H	TR3PTDF	7...20%	1
Start value 5.H	TR3PTDF	10...50%	1
Stop value 5.H	TR3PTDF	10...50%	1
Slope section 3	TR3PTDF	10...100%	1
Current group 3 type	TR3PTDF	1 = Not in use 2 = Winding 3 3 = Wnd 1 restraint 4 = Wnd 2 restraint	-
Zro A elimination	TR3PTDF	1 = Not eliminated 2 = Winding 1 3 = Winding 2 4 = Winding 1 and 2 5 = Winding 3 6 = Winding 1 and 3 7 = Winding 2 and 3 8 = Winding 1, 2, 3	-
Phase shift Wnd 1-2	TR3PTDF	0.0...359.9°	0.1
Phase shift Wnd 1-3	TR3PTDF	0.0...359.9°	0.1

26.30.157 Stabilized and instantaneous differential protection for two-winding transformers (TR2PTDF)

Table 190: Stabilized and instantaneous differential protection for two-winding transformers (TR2PTDF)

Characteristic		Value		
Operation accuracy		Depending on the frequency of the measured current: f_n ±2 Hz		
		±3.0% of the set value or ±0.002 × I_n		
Operate time [173, 174]		Minimum	Typical	Maximum
	Low stage	31 ms	35 ms	40 ms
	High stage	15 ms	17 ms	20 ms
Reset time		<40 ms		

Table continues on the next page

[173] 1) Current before fault = 0.0 × In, fn = 50 Hz. Injected differential current = 2.0 × set operation value

[174] 1) Measured with static power output. fn = 50 Hz

Characteristic	Value
Reset ratio	Typically 0.96
Suppression of harmonics	DFT: -50 dB at f = n × f_n, where n = 2, 3, 4, 5, …

26.30.158 Stabilized and instantaneous differential protection for two-winding transformers (TR2PTDF) main settings

Table 191: Stabilized and instantaneous differential protection for two-winding transformers (TR2PTDF) main settings

Parameter	Function	Value (Range)	Step
High operate value	TR2PTDF	500...3000 %Ir	10
Low operate value	TR2PTDF	5...50 %Ir	1
Slope section 2	TR2PTDF	10...50%	1
End section 2	TR2PTDF	100...500 %Ir	1
Restraint mode	TR2PTDF	5 = Waveform 6 = 2.h + waveform 8 = 5.h + waveform 9 = 2.h + 5.h + wav	-
Start value 2.H	TR2PTDF	7...20%	1
Start value 5.H	TR2PTDF	10...50%	1
Operation	TR2PTDF	1 = on 5 = off	-
Winding 1 type	TR2PTDF	1 = Y 2 = YN 3 = D 4 = Z 5 = ZN	-
Winding 2 type	TR2PTDF	1 = y 2 = yn 3 = d 4 = z 5 = zn	-
Zro A elimination	TR2PTDF	1 = Not eliminated 2 = Winding 1 3 = Winding 2 4 = Winding 1 and 2	-

26.30.159 Numerical stabilized low-impedance restricted earth-fault protection (LREFPNDF)

Table 192: Numerical stabilized low-impedance restricted earth-fault protection (LREFPNDF)

Characteristic		Value		
Operation accuracy		Depending on the frequency of the measured current: f_n ±2 Hz		
		±2.5% of the set value or ±0.002 x I_n		
Start time [175, 176]	I_{Fault} = 2.0 × set Operate value	Minimum	Typical	Maximum
		37 ms	41 ms	45 ms
Reset time		Typically 40 ms		
Reset ratio		Typically 0.96		
Retardation time		<35 ms		
Operate time accuracy in definite time mode		±1.0% of the set value or ±20 ms		
Suppression of harmonics		DFT: -50 dB at f = n × f_n, where n = 2, 3, 4, 5, …		

26.30.160 Numerical stabilized low-impedance restricted earth-fault protection (LREFPNDF) main settings

Table 193: Numerical stabilized low-impedance restricted earth-fault protection (LREFPNDF) main settings

Parameter	Function	Value (Range)	Step
Operate value	LREFPNDF	5.0. 50.0 %I_n	1
Minimum operate time	LREFPNDF	40...300000 ms	1
Restraint mode	LREFPNDF	1 = None 2 = Harmonic2	-
Start value 2.H	LREFPNDF	10...50%	1
Operation	LREFPNDF	1 = on 5 = off	-

175 Current before fault = 0.0, f_n = 50 Hz, results based on statistical distribution of 1000 measurements

176 Includes the delay of the signal output contact

26.30.161 High-impedance based restricted earth-fault protection (HREFPDIF)

Table 194: High-impedance based restricted earth-fault protection (HREFPDIF)

Characteristic		Value		
Operation accuracy		Depending on the frequency of the measured current: f_n ±2 Hz		
		±1.5% of the set value or ±0.002 × I_n		
Start time [177, 178]		Minimum	Typical	Maximum
	I_{Fault} = 2.0 × set *Operate value*	16 ms	21 ms	23 ms
	I_{Fault} = 10 × set *Operate value*	11 ms	13 ms	14 ms
Reset time		Typically 40 ms		
Reset ratio		Typically 0.96		
Retardation time		<35 ms		
Operate time accuracy in definite time mode		±1.0% of the set value or ±20 ms		

26.30.162 High-impedance based restricted earth-fault protection (HREFPDIF) main settings

Table 195: High-impedance based restricted earth-fault protection (HREFPDIF) main settings

Parameter	Function	Value (Range)	Step
Operate value	HREFPDIF	1.0 50.0%I_n	0.1
Minimum operate time	HREFPDIF	20...300000 ms	1
Operation	HREFPDIF	1 = on 5 = off	-

26.30.163 High-impedance differential protection (HIxPDIF)

Table 196: High-impedance differential protection (HIxPDIF)

Characteristic		Value		
Operation accuracy		Depending on the frequency of the current measured: f_n ±2 Hz		
		±1.5% of the set value or ±0.002 × I_n		
Start time [179, 180]	I_{Fault} = 2.0 × set *Start value*	Minimum	Typical	Maximum
	I_{Fault} = 10 × set *Start value*	8 ms	11 ms	19 ms
		7 ms	9 ms	11 ms

Table continues on the next page

177 Current before fault = 0.0 × I_n, f_n = 50 Hz, results based on statistical distribution of 1000 measurements
178 Includes the delay of the signal output contact
179 *Measurement mode* = default (depends on stage), current before fault = 0.0 × I_n, f_n = 50 Hz, fault current in one phase with nominal frequency injected from random phase angle, results based on statistical distribution of 1000 measurements
180 Measured with static signal output (SSO)

Characteristic	Value
Reset time	Typically <40 ms
Reset ratio	Typically 0.96
Retardation time	<35 ms
Operate time accuracy in definite time mode	±1.0% of the set value or ±20 ms

26.30.164 High-impedance differential protection (HIxPDIF) main settings

Table 197: High-impedance differential protection (HIxPDIF) main settings

Parameter	Function	Value (Range)	Step
Operate value	HIxPDIF	1.0 200.0 %I_n	1.0
Minimum operate time	HIxPDIF	20...300000 ms	10

26.30.165 Circuit breaker failure protection (CCBRBRF)

Table 198: Circuit breaker failure protection (CCBRBRF)

Characteristic	Value
Operation accuracy	Depending on the frequency of the measured current: f_n ±2 Hz
	±1.5% of the set value or ±0.002 × I_n
Operate time accuracy	±1.0% of the set value or ±20 ms
Reset time	<20 ms
Retardation time	<20 ms

26.30.166 Circuit breaker failure protection (CCBRBRF) main settings

Table 199: Circuit breaker failure protection (CCBRBRF) main settings

Parameter	Function	Value (Range)	Step
Current value	CCBRBRF	0.05...2.00 × I_n	0.01
Current value Res	CCBRBRF	0.05...2.00 × I_n	0.01
CB failure trip mode	CCBRBRF	1 = 2 out of 4 2 = 1 out of 3 3 = 1 out of 4	-
CB failure mode	CCBRBRF	1 = Current 2 = Breaker status 3 = Both (AND) -1 = Both (OR)	-
Retrip time	CCBRBRF	0...60000 ms	10
CB failure delay	CCBRBRF	0...60000 ms	10
CB fault delay	CCBRBRF	0...60000 ms	10

26.30.167 Circuit breaker failure protection - single phase breakers (SPCCBRBRF)

Table 200: Circuit breaker failure protection - single phase breakers (SPCCBRBRF)

Characteristic	Value
Operation accuracy	Depending on the frequency of the measured current: f_n ±2 Hz
	Current measurement: ±1.5 % of the set value or ±0.002 × I_n
Operate time accuracy in definite time mode	±1.0% of the set value or ±20 ms
Reset time	<20ms
Retardation time	<20ms
Suppression of harmonics	-50 dB at f = n × f_n, where n = 2, 3, 4, 5, …

26.30.168 Circuit breaker failure protection - single phase breakers (SPCCBRBRF) main settings

Table 201: Circuit breaker failure protection - single phase breakers (SPCCBRBRF) main settings

Parameter	Function	Values (Range)	Step
Operation	SPCCBRBRF	1=on 5=off	
Current value	SPCCBRBRF	0.05...2.00	0.01
CB failure mode	SPCCBRBRF	1=Current 2=Breaker status 3=Both (AND) -1=Both (OR)	
CB fail retrip mode	SPCCBRBRF	1=Off 2=Without Check 3=With check	
Retrip time	SPCCBRBRF	0...60000	10
CB failure delay	SPCCBRBRF	0...60000	10

26.30.169 Three-phase inrush detector (INRPHAR)

Table 202: Three-phase inrush detector (INRPHAR)

Characteristic	Value
Operation accuracy	At the frequency f = f_n
	Current measurement: ±1.5% of the set value or ±0.002 × I_n Ratio I2f/I1f measurement: ±3 % of the set value or ±0.01 × I_n
Reset time	+35 ms / -0 ms
Reset ratio	Typically 0.96
Operate time accuracy	+35 ms / -0 ms

26.30.170 Three-phase inrush detector (INRPHAR) main settings

Table 203: Three-phase inrush detector (INRPHAR) main settings

Parameter	Function	Value (Range)	Step
Start value	INRPHAR	5...100%	1
Operate delay time	INRPHAR	20...60000 ms	1

26.30.171 Residual current inrush detector (RINRPHAR)

Table 204: Residual current inrush detector (RINRPHAR)

Characteristic	Value
Operation accuracy	At the frequency f = f_n
	Current measurement: ±1.5% or ±0.002 xI_n Ratio I2f/I1f measurement: ±3.0 % of the set value or ±0.01xI_n
Reset time	+35ms / -0ms
Reset ratio	Typically 0.96
Operation time accuracy	+35ms / -0ms

26.30.172 Residual current inrush detector (RINRPHAR) main settings

Table 205: Residual current inrush detector (RINRPHAR) main settings

Parameter	Function	Values (Range)	Step
Start value	RINRPHAR	5...100	1
Operate delay time	RINRPHAR	20...60000	1
Latch value	RINRPHAR	1...2500	1

26.30.173 Stub protection (STBPDIF)

Table 206: Stub protection (STBPDIF)

Characteristics		Value		
Operation accuracy		Depending on the frequency of the measured current: fn ±1 Hz		
		±2.5% of the set value or ±0.004 x In		
Operate time [181, 182]		Minimum	Typical	Maximum
	Replace with I_{fault} = 2 x set *Operate value*	22 ms	23 ms	26 ms
	Replace with I_{fault} = 10 x set *Operate value*	14 ms	16 ms	19 ms
Operate time accuracy		±1.0% of the set value or ±20 ms		
Reset time		< 40 ms		
Reset ratio		Typically 0.96		
Retardation time [183]		<25 ms		
Suppression of harmonics		-50 dB at f = n × fn, where n = 2, 3, 4, 5, …		

26.30.174 Stub protection (STBPDIF) main settings

Table 207: Stub protection (STBPDIF) main settings

Parameter	Function	Values (Range)	Step
Operate value	STBPDIF	5.0...50.0	1.0
Minimum operate time	STBPDIF	20...200000	1.0

26.30.175 Arc protection (ARCSARC)

Table 208: Arc protection (ARCSARC)

Characteristic		Value		
Operation accuracy		±3.0% of the set value or ±0.01 × I_n		
Operate time TC	Operation mode = "Light	Minimum	Typical	Maximum

Table continues on the next page

181 Fn = 50 Hz, results based on statistical distribution of 1000 measurements
182 Includes the delay of the power output contact
183 I_{Fault} ≤ 2 x *Operate value*

Characteristic		Value		
	+current" [184]	9 ms [135]	10 ms [135]	13 ms [135]
	Operation mode = "Light only" [185]	3 ms [186]	5 ms [136]	6 ms [136]
		8 ms [135]	10 ms [135]	13 ms [135]
		3 ms [136]	5 ms [136]	6 ms [136]
Reset time		Typically 50 ms		
Reset ratio		Typically 0.96		

26.30.176 Arc protection (ARCSARC) main settings

Table 209: Arc protection (ARCSARC) main settings

Parameter	Function	Value (Range)	Step
Phase start value	ARCSARC	0.50...40.00 × I_n	0.01
Ground start value	ARCSARC	0.05...8.00 × I_n	0.01
Operation mode	ARCSARC	1 = Light+current 2 = Light only 3 = BI controlled	-

26.30.177 High-impedance fault detection (PHIZ) main settings

Table 210: High-impedance fault detection (PHIZ) main settings

Parameter	Function	Value (Range)	Step
Security Level	PHIZ	1...10	1
System type	PHIZ	1 = Grounded 2 = Ungrounded	-

26.30.178 Fault locator (SCEFRFLO)

Table 211: Fault locator (SCEFRFLO)

Characteristic	Value
Measurement accuracy	At the frequency f = f_n
	Impedance: ±2.5% or ±0.25 Ω

Table continues on the next page

184 *Phase start value* = 1.0 × I_n, current before fault = 2.0 × set *Phase start value* , f_n = 50 Hz, fault with nominal frequency, results based on statistical distribution of 200 measurements
185 Includes the delay of the power output (PO) contact
186 Measured with static power output (SPO)

Characteristic	Value
	Distance: ±2.5% or ±0.16 km/0.1 mile XC0F_CALC: ±2.5% or ±50 Ω IFLT_PER_ILD: ±5% or ±0.05

26.30.179 Fault locator (SCEFRFLO) main settings

Table 212: Fault locator (SCEFRFLO) main settings

Parameter	Function	Value (Range)	Step
Z Max phase load	SCEFRFLO	1.0...10000.00 Ω	0.1
Ph leakage Ris	SCEFRFLO	20...1000000 Ω	1
Ph capacitive React	SCEFRFLO	10...1000000 Ω	1
R1 line section A	SCEFRFLO	0.000...1000.000 Ω/pu	0.001
X1 line section A	SCEFRFLO	0.000...1000.000 Ω/pu	0.001
R0 line section A	SCEFRFLO	0.000...1000.000 Ω/pu	0.001
X0 line section A	SCEFRFLO	0.000...1000.000 Ω/pu	0.001
Line Len section A	SCEFRFLO	0.000...1000.000 pu	0.001

26.30.180 Load-shedding and restoration (LSHDPFRQ)

Table 213: Load-shedding and restoration (LSHDPFRQ)

Characteristic		Value
Operation accuracy	f<	±5 mHz
	df/dt	±100 mHz/s (in range |df/dt| < 5 Hz/s) ± 2.0% of the set value (in range 5 Hz/s < |df/dt| < 15 Hz/s)
Start time	f<	<80 ms
	df/dt	<120 ms
Reset time		<150 ms
Operate time accuracy		±1.0% of the set value or ±30 ms

26.30.181 Load-shedding and restoration (LSHDPFRQ) main settings

Table 214: Load-shedding and restoration (LSHDPFRQ) main settings

Parameter	Function	Value (Range)	Step
Load shed mode	LSHDPFRQ	1 = Freq< 6 = Freq< OR df/dt 8 = Freq< AND df/dt	-
Restore mode	LSHDPFRQ	1 = Disabled 2 = Auto 3 = Manual	-
Start value Freq	LSHDPFRQ	0.6500 1.200 × f_n	0.001
Start value df/dt	LSHDPFRQ	-0.200 0.005 × f_n/s	0.005
Operate Tm Freq	LSHDPFRQ	80...200000 ms	10
Operate Tm df/dt	LSHDPFRQ	120...200000 ms	10
Restore start Val	LSHDPFRQ	0.6500 1.200 × f_n	0.001
Restore delay time	LSHDPFRQ	80...200000 ms	10

26.30.182 Multipurpose protection (MAPGAPC)

Table 215: Multipurpose protection (MAPGAPC)

Characteristic	Value
Operation accuracy	±1.0% of the set value or ±20 ms

26.30.183 Multipurpose protection (MAPGAPC) main settings

Table 216: Multipurpose protection (MAPGAPC) main settings

Parameter	Function	Value (Range)	Step
Start value	MAPGAPC	-10000.0...10000.0	0.1
Operate delay time	MAPGAPC	0...200000 ms	100
Operation mode	MAPGAPC	1 = Over 2 = Under	-

26.30.184 Current disturbance detector (CDDPTOC)

Table 217: Current disturbance detector (CDDPTOC)

Characteristic	Value
Operation accuracy	Depending on the frequency of the measured current: fn ±2 Hz
	±1.5% of the set value or ±0.002 × In
Operate time accuracy	±1.0% of the set value or ±20 ms

26.30.185 Current disturbance detector (CDDPTOC) main settings

Table 218: Current disturbance detector (CDDPTOC) main settings

Parameter	Function	Value (Range)	Step
Current change rate	CDDPTOC	5.0...100.0	0.1
Change direction	CDDPTOC	1=Increase 2=Decrease 3=Both	-

26.30.186 Faulty phase supervision for earth fault (FPHRPHS) main settings

Table 219: Faulty phase supervision for earth fault (FPHRPHS) main settings

Parameter	Function	Value (Range)	Step
Phase indication mode	FPHRPHS	5=Current delta 6=Cur AND Vol delta	-

26.30.187 Generator shaft current leakage protection (GSLPTOC)

Table 220: GSLPTOC Technical data

Characteristics	Value
Operation accuracy	Depending on the frequency of the measured current f_n ±2 Hz
	±1.5% of the set value or ±0.03 × I_n
Start time [187, 188]	Typically 30ms
Reset time	<30 ms
Reset ratio	Typically 0.96
Retardation time	<50 ms
Operate time accuracy	±1.0% of the set value of ±20 ms

[187] Current before fault = 0.0 x I_n, f_n = 50 Hz, nominal frequency fault current 1.1 x set *Start value* is injected, results based on statistical distribution of 1000 measurements

[188] Includes the delay (≈0ms) of the static signal output (SSO)

26.30.188 Generator shaft current leakage protection (GSLPTOC) main settings

Table 221: Generator shaft current leakage protection (GSLPTOC) main settings

Parameter	Function	Value (Range)	Step
Alarm start value	GSLPTOC	0.10...10.00 A	0.01
Alarm delay time	GSLPTOC	40...30000 ms	10
Sel operate harmonic	GSLPTOC	1=Fundamental 3=Third harmonic 5=Fifth harmonic	
Operate start value	GSLPTOC	0.10...10.00 A	0.01
Operate delay time	GSLPTOC	40...30000 ms	10

26.30.189 Operation characteristics

Table 222: Operation characteristics

Parameter	Value (Range)
Operating curve type	1 = ANSI Ext. inv. 2 = ANSI Very. inv. 3 = ANSI Norm. inv. 4 = ANSI Mod inv. 5 = ANSI Def. Time 6 = L.T.E. inv. 7 = L.T.V. inv. 8 = L.T. inv. 9 = IEC Norm. inv. 10 = IEC Very inv. 11 = IEC inv. 12 = IEC Ext. inv. 13 = IEC S.T. inv. 14 = IEC L.T. inv 15 = IEC Def. Time 17 = Programmable 18 = RI type 19 = RD type
Operating curve type (voltage protection)	5 = ANSI Def. Time 15 = IEC Def. Time 17 = Inv. Curve A 18 = Inv. Curve B 19 = Inv. Curve C 20 = Programmable 21 = Inv. Curve A 22 = Inv. Curve B 23 = Programmable

26.31 Control functions

26.31.1 Emergency start-up (ESMGAPC)

Table 223: Emergency start-up (ESMGAPC)

Characteristic	Value
Operation accuracy	At the frequency f = f_n
	±1.5% of the set value or ±0.002 × U_n

26.31.2 Emergency start-up (ESMGAPC) main settings

Table 224: Emergency start-up (ESMGAPC) main settings

Parameter	Function	Value (Range)	Step
Motor stand still A	ESMGAPC	0.01...0.20 × I_n	0.01

26.31.3 Autoreclosing (DARREC)

Table 225: Autoreclosing (DARREC)

Characteristic	Value
Operate time accuracy	±1.0% of the set value or ±20 ms

26.31.4 Single Phase Autoreclosing (SPARREC)

Table 226: Single Phase Autoreclosing (SPARREC)

Characteristic	Value
Operate time accuracy	±1 % of the theoretical value or ±20 ms

26.31.5 Autosynchronizer for generator breaker (ASGCSYN)

Table 227: Autosynchronizer for generator breaker (ASGCSYN)

Characteristic	Value
Measurement accuracy	At the frequency f = f_n
	Voltage difference: ±1.0% or ±0.004 × U_n Frequency difference: ±10 mHz Phase angle difference: ±1° (±2.5° when f = f_n±2 Hz)
Operation accuracy	MATCH_OK for voltage: ±0.001 × U_n MATCH_OK for frequency: ±10 mHz

Table continues on the next page

Characteristic	Value
Operation time accuracy	Raise/Lower output pulse width: ±1.0% of the set value or ±20 ms *Energizing time* for dead-bus closing: ±1.0% of the set value or ±35 ms *Minimum Syn time* for SYNC_OK: ±1.0% of the set value or ±60 ms
Reset time	Typically 20 ms
Closing angle accuracy	±1°

26.31.6 Autosynchronizer for generator breaker (ASGCSYN) main settings

Table 228: Autosynchronizer for generator breaker (ASGCSYN) main settings

Parameter	Function	Value (Range)	Step
Live dead mode	ASGCSYN	-1 = Off -2 = Command 1 = Both Dead 4 = Dead B, G Any 2 = Live G, Dead B	-
Angle Diff positive	ASGCSYN	5...90°	1
Angle Diff negative	ASGCSYN	5...90°	1
Phase shift	ASGCSYN	-180...180°	1
Closing time of CB	ASGCSYN	40...250 ms	1
Synchronization Dir	ASGCSYN	1 = Always over synchronous 2 = Both direction	-
Synchrocheck mode	ASGCSYN	1 = Off 3 = Asynchronous 4 = Command	-
Dead voltage value	ASGCSYN	0.10...0.80 × U_n	0.1
Live voltage value	ASGCSYN	0.20...1.00 × U_n	0.1
Voltage match mode	ASGCSYN	1 = Off 2 = Variable Pulse 3 = Variable Interval	-
Frequency match mode	ASGCSYN	1 = Off 2 = Variable Pulse 3 = Variable Interval	-

26.31.7 Autosynchronizer for network breaker (ASNSCSYN)

Table 229: Autosynchronizer for network breaker (ASNSCSYN)

Characteristic	Value
Measurement accuracy	Depending on the frequency of the voltage measured: f_n ±2 Hz
	Voltage difference: ±1.0% or ±0.004 × U_n Frequency difference: ±10 mHz Phase angle difference: ±1°
Operation accuracy	MATCH_OK for voltage: ±0.001 × U_n MATCH_OK for frequency: ±10 mHz
Operation time accuracy	*Energizing time* for dead-bus closing: ±1.0% of the set value or ±35 ms *Minimum Syn time* for SYNC_OK: ±1.0% of the set value or ±60 ms
Reset time	Typically 20 ms
Closing angle accuracy	±1°

26.31.8 Autosynchronizer for network breaker (ASNSCSYN) main settings

Table 230: Autosynchronizer for network breaker (ASNSCSYN) main settings

Parameter	Function	Value (Range)	Step
Live dead mode	ASNSCSYN	-2 = Command -1 = Off 1 = Both Dead 2 = Live B, Dead A 3 = Dead B, Live A 4 = Dead A, B Any 5 = Dead B, A Any 6 = One Live, Dead 7 = Not Both Live	-
Diff voltage	ASNSCSYN	0.01...0.50 × U_n	0.01
Diff frequency	ASNSCSYN	0.001...0.060 × f_n	0.001
Diff angle	ASNSCSYN	5...90°	1

Table continues on the next page

Parameter	Function	Value (Range)	Step
Synchrocheck mode	ASNSCSYN	1 = Off 2 = Synchronous 3 = Asynchronous 4 = Command	-
Dead bus voltage	ASNSCSYN	0.1...0.8 × U_n	0.1
Live bus voltage	ASNSCSYN	0.2...1.0 × U_n	0.1
Phase shift	ASNSCSYN	-180...180°	1
Closing time of CB	ASNSCSYN	40...250 ms	1

26.31.9 Synchronism and energizing check (SECRSYN)

Table 231: Synchronism and energizing check (SECRSYN)

Characteristic	Value
Operation accuracy	Depending on the frequency of the voltage measured: f_n ±1 Hz Voltage: ±3.0% of the set value or ±0.01 × U_n Frequency: ±10 mHz Phase angle: ±3°
Reset time	<50 ms
Reset ratio	Typically 0.96
Operate time accuracy in definite time mode	±1.0% of the set value or ±20 ms

26.31.10 Synchronism and energizing check (SECRSYN) main settings

Table 232: Synchronism and energizing check (SECRSYN) main settings

Parameter	Function	Value (Range)	Step
Live dead mode	SECRSYN	-1 = Off 1 = Both Dead 2 = Live L, Dead B 3 = Dead L, Live B 4 = Dead Bus, L Any 5 = Dead L, Bus Any 6 = One Live, Dead 7 = Not Both Live	-
Difference voltage	SECRSYN	0.01. 0.50 × U_n	0.01
Difference frequency	SECRSYN	0.001. 0.100 × f_n	0.001

Table continues on the next page

Parameter	Function	Value (Range)	Step
Difference angle	SECRSYN	5...90°	1
Synchrocheck mode	SECRSYN	1 = Off 2 = Synchronous 3 = Asynchronous 5 = Automatic	-
Dead line value	SECRSYN	0.1. 0.8 × U_n	0.1
Live line value	SECRSYN	0.2. 1.0 × U_n	0.1
Max energizing V	SECRSYN	0.50 1.15 × U_n	0.01
Control mode	SECRSYN	1 = Continuous 2 = Command	-
Close pulse	SECRSYN	200...60000 ms	10
Phase shift	SECRSYN	-180...180°	1
Minimum Syn time	SECRSYN	0...60000 ms	10
Maximum Syn time	SECRSYN	100...6000000 ms	10
Energizing time	SECRSYN	100...60000 ms	10
Closing time of CB	SECRSYN	40...250 ms	10

26.31.11 Tap changer control with voltage regulator (OL5ATCC)

Table 233: Tap changer control with voltage regulator (OL5ATCC)

Characteristic	Value
Operation accuracy [189]	Depending on the frequency of the measured current: fn ±2 Hz
	Differential voltage U_d = ±0.5% of the measured value or ±0.005 × U_n (in measured voltages <2.0 × U_n) Operation value = ±1.5% of the U_d for Us = 1.0 × U_n
Operate time accuracy in definite time mode [190]	+4.0%/-0% of the set value
Operate time accuracy in inverse time mode [138]	+8.5%/-0% of the set value (at theoretical B in range of 1.1…5.0) Also note fixed minimum operate time (IDMT) 1 s
Reset ratio for control operation	Typically 0.80 (1.20)
Reset ratio for analog based blockings (except run back raise voltage blocking)	Typically 0.96 (1.04)

189 Default setting values used
190 Voltage before deviation = set *Band center voltage*

26.31.12 Tap changer control with voltage regulator (OL5ATCC) main settings

Table 234: Tap changer control with voltage regulator (OL5ATCC) main settings

Parameter	Function	Value (Range)	Step
LDC enable	OL5ATCC	0 = False 1 = True	-
Parallel mode	OL5ATCC	2 = Master 3 = Follower 5 = NRP 7 = MCC -1 = Input control -2 = Command	-
Band center voltage	OL5ATCC	0.000...2.000 × U_n	0.001
Line drop V Ris	OL5ATCC	0.0...25.0%	0.1
Line drop V React	OL5ATCC	0.0...25.0%	0.1
Band reduction	OL5ATCC	0.00...9.00 %U_n	0.01
Stability factor	OL5ATCC	0.0...70.0%	0.1
Rv Pwr flow allowed	OL5ATCC	0 = False 1 = True	-
Operation mode	OL5ATCC	1 = Manual 2 = Auto single 3 = Parallel manual 4 = Auto parallel 5 = Input control 6 = Command	-
Parallel trafos	OL5ATCC	0...10	1
Delay characteristic	OL5ATCC	0 = Inverse time 1 = Definite time	-
Band width voltage	OL5ATCC	1.20...18.00 %U_n	0.01
Load current limit	OL5ATCC	0.10...5.00 × I_n	0.01
Block lower voltage	OL5ATCC	0.10...1.20 × U_n	0.01
LTC pulse time	OL5ATCC	500...10000 ms	100

26.31.13 Petersen coil controller (PASANCR)

Table 235: PASANCR Technical data

Characteristic	Value
Measuring accuracy	Resistance: ±2% or ±1 Ω
Operation accuracy [191]	I_C_NETWORK: Typically ±5%

26.31.14 Petersen coil controller (PASANCR) main settings

Table 236: Petersen coil controller (PASANCR) main settings

Parameter	Function	Value (Range)	Step
Compensation mode	PASANCR	1 = Absolute 2 = Relative	-
Detuning level	PASANCR	-100...100 A	1
Detuning level Rl	PASANCR	-100.0...100.0%	0.1
Tuning delay	PASANCR	0...3600 s	1
V Res variation	PASANCR	0.1...100.0 %U_n	0.1
Tuning mode	PASANCR	1 = Coil movement 2 = Resistor switching	-
V Res EF level	PASANCR	0.00...100.00 %Un	0.01
EF mode	PASANCR	1 = Blocked during EF 2 = Resonance 3 = Tuning during EF	-
Resistor healthy St	PASANCR	0 = Off 1 = On	-
Resistor repeats	PASANCR	0...100	1
Resistor pause	PASANCR	0...100000000 ms	1
Coil V Nom	PASANCR	0...400000 V	1
Fix coil V Nom	PASANCR	0...400000 V	1
Auxiliary Wnd V Nom	PASANCR	0...10000 V	1
Controller mode	PASANCR	0 = Manual 1 = Automatic	-

Table continues on the next page

[191] Network resonance point voltage must be at least 0.005 × U_n, where U_n = nominal phase-to-earth voltage

Parameter	Function	Value (Range)	Step
Parallel resistor	PASANCR	0 = False 1 = True	-
R0Transformer	PASANCR	0...100 Ω	1
X0Transformer	PASANCR	0...100 Ω	1
Voltage measurement	PASANCR	1 = Busbar 2 = Coil	-
Resistor control	PASANCR	1 = OFF 2 = ON 3 = Automatic	-
Resistor Nom value	PASANCR	0.00...100.00 Ω	0.01
Fix coil value	PASANCR	0...10000 A	1
Fix coil type	PASANCR	1 = OFF 2 = ON 3 = Automatic	-

26.31.15 High speed bus transfer (HSABTC)

Table 237: High speed bus transfer (HSABTC)

Characteristic		Value		
Operation accuracy	Voltage	±1.5% of the set value or ±0.002 × Un, frequency range ±10Hz		
	Frequency	±25mHz of the set value		
Initiation time		Minimum	Typical	Maximum
	Under voltage[192, 193, 194]	14 ms	18 ms	21 ms
	Under frequency[195, 196, 197]	47 ms	49 ms	50 ms
	External (binary input)[198, 199, 200]	9 ms	10 ms	12 ms

Table continues on the next page

192 *Start val Voltage* = 0.95 × Un, voltage before fault = 1.0 × Un, fault voltage = 0.9 × set *Start val Voltage*, undervoltage in one phase-to-phase voltage with nominal frequency injected from random phase angle
193 Measured with static power output (SPO)
194 Results based on statistical distribution of 1000 measurements
195 Measured with static power output (SPO)
196 Results based on statistical distribution of 1000 measurements
197 Applies to continuous frequency change. If frequency change ≥ 0.5Hz (disturbance in network or due to test setup), then initiation time is increased with 100ms to prevent false reaction.
198 Measured with static power output (SPO)
199 Results based on statistical distribution of 1000 measurements
200 Excluding the delay of the external triggering device

Characteristic	Value
Initiation time accuracy	±20 ms of the set value
Operate time accuracy	±1.0% of the set value or ±20 ms

26.31.16 High speed bus transfer (HSABTC) main settings

Table 238: High speed bus transfer (HSABTC) main settings

Parameter	Function	Value (Range)	Step
Min standby voltage	HSABTC	0.05...1.20 xUn	0.01
Min busbar voltage	HSABTC	0.05...1.20 xUn	0.01
Residual voltage limit	HSABTC	0.01...1.00 xUn	0.01
Start Val frequency	HSABTC	0.900...1.100 xFn	0.001
Start Val voltage	HSABTC	0.50...1.20 xUn	0.01
Operation mode	HSABTC	1=Only ext 2=Freq< 3=U< 4=Both	
Max frequency Diff	HSABTC	0.05...2.50 Hz	0.01
Maximum phase lead	HSABTC	5...50 deg	1
Maximum phase lag	HSABTC	5...50 deg	1
Max angle Diff FBBM	HSABTC	5...90 deg	1
Maximum DfDt	HSABTC	5...40	1
Transfer delay time	HSABTC	100...200000 ms	1
Enable fast transfer	HSABTC	1=1>2 2=2>1 3=Both 4=Off	
Enable FBBM	HSABTC		
Ena 1st Ph transfer	HSABTC	1=1>2 2=2>1 3=Both 4=Off	
Ena Res V transfer	HSABTC	1=1>2 2=2>1 3=Both 4=Off	

Table continues on the next page

Parameter	Function	Value (Range)	Step
Ena Time delay transfer	HSABTC	1=1>2 2=2>1 3=Both 4=Off	
Ena CB open transfer	HSABTC	1=1>2 2=2>1 3=Both 4=Off	
Manual transfer	HSABTC	1=Off 2=On 3=Fast MBB	
Closing time of CB1	HSABTC	0...200 ms	1
Opening time of CB1	HSABTC	0...200 ms	1
Closing time of CB2	HSABTC	0...200 ms	1
Opening time of CB2	HSABTC	0...200 ms	1
Travel time Clc mode	HSABTC	1=From Cmd to Pos 2=From Pos to Pos 3=From Cmd to Curr 4=From Pos to Curr	

26.32 Condition monitoring and supervision functions

26.32.1 Circuit-breaker condition monitoring (SSCBR)

Table 239: Circuit-breaker condition monitoring (SSCBR)

Characteristic	Value
Current measuring accuracy	±1.5% or ±0.002 × I_n (at currents in the range of 0.1…10 × I_n) ±5.0% (at currents in the range of 10…40 × I_n)
Operate time accuracy	±1.0% of the set value or ±20 ms
Travelling time measurement	+10 ms / -0 ms

26.32.2 Circuit-breaker condition monitoring, single phase (SPSCBR)

Table 240: Circuit-breaker condition monitoring, single phase (SPSCBR)

Characteristic	Value
Current measuring accuracy	±1.5% or ±0.002 x In (at currents in the range of 0.1…10 x In) ±5.0% (at currents in the range of 10…40 x In)
Operate time accuracy	±1.0% of the set value or ±20 ms
Travelling time measurement	+10 ms / -0 ms

26.32.3 Motor controlled earthing switch and disconnector supervision (ESDCSSWI)

Table 241: Motor controlled earthing switch and disconnector supervision (ESDCSSWI)

Characteristic	Value
Operate time accuracy	±1.0 % of the set value or ±20 ms
Travelling time measurement	+10 ms / -5 ms

26.32.4 Motor controlled earthing switch and disconnector supervision (ESDCSSWI) main settings

Table 242: Motor controlled earthing switch and disconnector supervision (ESDCSSWI) main settings

Parameter	Function	Value (Range)	Step
Alarm Op number	ESDCSSWI	0...99999	1
Open alarm time	ESDCSSWI	40...30000 ms	10
Close alarm time	ESDCSSWI	40...30000 ms	10
Inactive Alm days	ESDCSSWI	0...9999	1
Inactive Alm hours	ESDCSSWI	0...23 h	1
Travel time Clc mode	ESDCSSWI	1=From Cmd to Pos 2=From Pos to Pos	

26.32.5 Hot-spot and insulation ageing rate monitoring for transformers (HSARSPTR)

Table 243: Hot-spot and insulation ageing rate monitoring for transformers (HSARSPTR)

Characteristic	Value
Warning/alarm time accuracy	±1.0% of the set value or ±0.50 s

26.32.6 Hot-spot and insulation ageing rate monitoring for transformers (HSARSPTR) main settings

Table 244: Hot-spot and insulation ageing rate monitoring for transformers (HSARSPTR) main settings

Parameter	Function	Value (Range)	Step
Cooling mode	HSARSPTR	1 = ONAN 2 = ONAF 3 = OFAF 4 = ODAF	-
Alarm level	HSARSPTR	50.0...350.0°C	0.1
Warning level	HSARSPTR	50.0...350.0°C	0.1
Alarm delay time	HSARSPTR	0...3600000 ms	10
Warning delay time	HSARSPTR	0...3600000 ms	10
Average ambient Tmp	HSARSPTR	-20.00...70.00°C	0.01
Alarm level Age Rte	HSARSPTR	0.00...100.00	1

26.32.7 Cable fault detection (RCFD)

Table 245: Cable fault detection (RCFD)

Characteristic	Value		
Operation accuracy	Depending on the frequency of the measured current: f_n ±2 Hz		
	±2.5% of the set value or 0.005 xI_n		
Alarm time[201, 202]	Minimum	Typical	Maximum
	10 ms	15 ms	20 ms

26.32.8 Cable fault detection (RCFD) main settings

Table 246: Cable fault detection (RCFD) main settings

Parameter	Function	Value (Range)	Step
Adaptive Str Val Ena	RCFD		
Maximum fault cycle	RCFD	1...20	1
Minimum load current	RCFD	0.00...1.00 xIn	0.10
Residual current limit	RCFD	0.00...1.00 xIn	0.10
Phase start value	RCFD	0.10...40.00 xIn	0.01
Residual start value	RCFD	0.10...40.00 xIn	0.01

26.32.9 Current circuit supervision (CCSPVC)

Table 247: Current circuit supervision (CCSPVC)

Characteristic	Value
Operate time [203]	<30 ms

26.32.10 Current circuit supervision (CCSPVC) main settings

Table 248: Current circuit supervision (CCSPVC) main settings

Parameter	Function	Value (Range)	Step
Start value	CCSPVC	0.05...0.20 × I_n	0.01
Max operate current	CCSPVC	1.00...5.00 × I_n	0.01

201 Results based on statistical distribution of 1000 measurements
202 Measured with static signal output (SSO)
203 Including the delay of the output contact

26.32.11 Advanced current circuit supervision for transformers (CTSRCTF)

Table 249: Advanced current circuit supervision for transformers (CTSRCTF)

Characteristic	Value
Operate time [204]	<30 ms

26.32.12 Current circuit supervision (CTSRCTF) main settings

Table 250: Current circuit supervision (CTSRCTF) main settings

Parameter	Function	Value (Range)	Step
Min operate current	CTSRCTF	0.01...0.50 × I_n	0.01
Max operate current	CTSRCTF	1.00...5.00 × I_n	0.01
Max Ng Seq current	CTSRCTF	0.01...1.00 × I_n	0.01

26.32.13 Current transformer supervision for high-impedance protection scheme (HZCCxSPVC)

Table 251: Current transformer supervision for high-impedance protection scheme (HZCCxSPVC)

Characteristic	Value
Oeration accuracy	Depending on the frequency of the current measured: f_n ±2 Hz
	±1.5% of the set value or ±0.002 × I_n
Reset time	<40 ms
Reset ratio	Typically 0.96
Retardation time	<35 ms
Operate time accuracy in definite time mode	±1.0% of the set value or ±20 ms

26.32.14 Current transformer supervision for high-impedance protection scheme (HZCCxSPVC) main settings

Table 252: Current transformer supervision for high-impedance protection scheme (HZCCxSPVC) main settings

Parameter	Function	Value (Range)	Step
Start value	HZCCxSPVC	1.0...100.0 %I_n	0.1
Alarm delay time	HZCCxSPVC	100...300000 ms	10
Alarm output mode	HZCCxSPVC	1 = Non-latched 3 = Lockout	-

[204] Including the delay of the output contact

26.32.15 Fuse failure supervision (SEQSPVC)

Table 253: Fuse failure supervision (SEQSPVC)

Characteristic		Value	
Operation accuracy	All functions	Depending on the frequency of the current measured: f_n ±2 Hz	
		±1.5 % of the set value or ±0.002 x U_n/I_n	
Operate time [205]	NPS or ZPS function	U_{Fault} = 1.1 × set *Neg/Zero Seq voltage Lev*	<35 ms
		U_{Fault} = 5.0 × set *Neg/Zero Seq voltage Lev*	<20 ms
	Delta function	ΔU = 1.1 × set *Voltage change rate*	<35 ms
		ΔU = 2.0 × set *Voltage change rate*	<25 ms
Reset time	All functions		<35 ms

26.32.16 Fuse failure voltage difference supervision (FFVDSPVC)

Table 254: Fuse failure voltage difference supervision (FFVDSPVC)

Characteristic	Value
Operation accuracy	Depending on the frequency of the current measured: f_n ±2 Hz
	±1.5 % of the set value or ±0.02 x U_n
Operate time [206]	<15 ms

26.32.17 Runtime counter for machines and devices (MDSOPT)

Table 255: Runtime counter for machines and devices (MDSOPT)

Description	Value
Motor runtime measurement accuracy[207]	±0.5%

26.32.18 Runtime counter for machines and devices (MDSOPT) main settings

Table 256: Runtime counter for machines and devices (MDSOPT) main settings

Parameter	Function	Value (Range)	Step
Warning value	MDSOPT	0...299999 h	1
Alarm value	MDSOPT	0...299999 h	1
Initial value	MDSOPT	0...299999 h	1

Table continues on the next page

205 Includes the delay of the signal output contact, f_n = 50 Hz, fault voltage with nominal frequency injected from random phase angle, results based on statistical distribution of 1000 measurements.
206 Measured with static signal output (SSO)
207 Of the reading, for a stand-alone relay, without time synchronization

Parameter	Function	Value (Range)	Step
Operating time hour	MDSOPT	0...23 h	1
Operating time mode	MDSOPT	1 = Immediate 2 = Timed Warn 3 = Timed Warn Alm	-

26.32.19 Three-phase remanent undervoltage supervision (MSVPR)

Table 257: Three-phase remanent undervoltage supervision (MSVPR)

Characteristic	Value
Operation accuracy	Depending on the frequency of the measured voltage: 20 Hz < f ≤ 70 Hz: ±1.5% of the set value or ±0.002 × U_n 10 Hz < f ≤ 20 Hz: ±4.0% of the set value or ±0.002 × U_n
Reset time	Typically 40 ms
Reset ratio	Typically 1.04
Operate time accuracy in definite time mode	±1.0% of the set value or ±20 ms

26.32.20 Three-phase remanent undervoltage supervision (MSVPR) main settings

Table 258: Three-phase remanent undervoltage supervision (MSVPR) main settings

Parameter	Function	Value (Range)	Step
Start value	MSVPR	0.05...1.20 × U_n	0.01
Operate delay time	MSVPR	100...300000 ms	100
Voltage selection	MSVPR	1 = phase-to-earth 2 = phase-to-phase	-
Num of phases	MSVPR	1 = 1 out of 3 2 = 2 out of 3 3 = 3 out of 3	-

26.32.21 Diesel generator monitoring and protection (DGMGAPC)

Table 259: Diesel generator monitoring and protection (DGMGAPC)

Characteristic	Value
Operation accuracy	Depending on the frequency of the measured voltage and current: f_n ±2 Hz
	Voltage:
	±1.5% of the set value or 0.002 xU_n
	Frequency:
	±5 mHz
	Active power:
	±3% of the set value or 0.002 xS_n
	Reactive power:
	±3% of the set value or 0.002 xS_n
Operate time accuracy	±1.0% of the set value or ±20 ms
Reset ratio	Typically 0.96/1.04

26.32.22 Diesel generator monitoring and protection (DGMGAPC) main settings

Table 260: Diesel generator monitoring and protection (DGMGAPC) main settings

Parameter	Function	Value (Range)	Step
Operate delay time	DGMGAPC	10...300000 ms	10
Min Freq limit	DGMGAPC	0.95...1 xFn	0.01
Max Freq limit	DGMGAPC	1...1.05 xFn	0.01
Min voltage limit	DGMGAPC	0.5...1.5 xUn	0.1
Max voltage limit	DGMGAPC	0.5...1.5 xUn	0.1
Disable time	DGMGAPC	10...3600000 ms	10
Backup delay time	DGMGAPC	10...300000 ms	10
Min active power	DGMGAPC	0.01...1 xSn	0.01
Max active power	DGMGAPC	0.1...2 xSn	0.01
Min reactive power	DGMGAPC	0.01...1 xSn	0.01
Max reactive power	DGMGAPC	0.1...2 xSn	0.01
F set point no load	DGMGAPC	0.1...2 xFn	0.01
Frequency droop	DGMGAPC	0...100 %Fn	0.01
U set point no load	DGMGAPC	0.1...2 xUn	0.01
Voltage droop	DGMGAPC	0...100 %Un	0.01
Total Num of Gn	DGMGAPC	1...8	1
Total Num of tie	DGMGAPC	1...8	1

26.33 Measurement functions

26.33.1 Three-phase current measurement (CMMXU)

Table 261: Three-phase current measurement (CMMXU)

Characteristic	Value
Operation accuracy	Depending on the frequency of the measured current: f_n ±2 Hz
	±0.5% or ±0.002 × I_n (at currents in the range of 0.01...4.00 × I_n)
Suppression of harmonics	DFT: -50 dB at f = n × f_n, where n = 2, 3, 4, 5,... RMS: No suppression

26.33.2 Sequence current measurement (CSMSQI)

Table 262: Sequence current measurement (CSMSQI)

Characteristic	Value
Operation accuracy	Depending on the frequency of the measured current: f/f_n = ±2 Hz
	±1.0% or ±0.002 × I_n at currents in the range of 0.01...4.00 × I_n
Suppression of harmonics	DFT: -50 dB at f = n × f_n, where n = 2, 3, 4, 5,...

26.33.3 Residual current measurement (RESCMMXU)

Table 263: Residual current measurement (RESCMMXU)

Characteristic	Value
Operation accuracy	Depending on the frequency of the current measured: f/f_n = ±2 Hz
	±0.5% or ±0.002 × I_n at currents in the range of 0.01...4.00 × I_n
Suppression of harmonics	DFT: -50 dB at f = n × f_n, where n = 2, 3, 4, 5,... RMS: No suppression

26.33.4 Three-phase voltage measurement (VMMXU)

Table 264: Three-phase voltage measurement (VMMXU)

Characteristic	Value
Operation accuracy	Depending on the frequency of the voltage measured: f_n ±2 Hz At voltages in range 0.01…1.15 × U_n
	±0.5% or ±0.002 × U_n
Suppression of harmonics	DFT: -50 dB at f = n × f_n, where n = 2, 3, 4, 5,… RMS: No suppression

26.33.5 Phase voltage measurement (VPHMMXU)

Table 265: VPHMMXU Technical data

Characteristic	Value
Operation accuracy	Depending on the frequency of the voltage measured: f_n ±2 Hz At voltages in range 0.01…1.15 × U_n
	±0.5 % or ±0.002 × U_n
Suppression of harmonics	DFT: -50 dB at f = n × f_n, where n = 2, 3, 4, 5,… RMS: No suppression

26.33.6 Single-phase voltage measurement (VAMMXU)

Table 266: Single-phase voltage measurement (VAMMXU)

Characteristic	Value
Operation accuracy	Depending on the frequency of the voltage measured: f_n ±2 Hz At voltages in range 0.01…1.15 × U_n
	±0.5% or ±0.002 × U_n
Suppression of harmonics	DFT: -50 dB at f = n × f_n, where n = 2, 3, 4, 5,… RMS: No suppression

26.33.7 Residual voltage measurement (RESVMMXU)

Table 267: Residual voltage measurement (RESVMMXU)

Characteristic	Value
Operation accuracy	Depending on the frequency of the measured voltage: f/f_n = ±2 Hz
	±0.5% or ±0.002 × U_n
Suppression of harmonics	DFT: -50 dB at f = n × f_n, where n = 2, 3, 4, 5,…
	RMS: No suppression

26.33.8 Sequence voltage measurement (VSMSQI)

Table 268: Sequence voltage measurement (VSMSQI)

Characteristic	Value
Operation accuracy	Depending on the frequency of the voltage measured: f_n ±2 Hz
	At voltages in range 0.01…1.15 × U_n
	±1.0% or ±0.002 × U_n
Suppression of harmonics	DFT: -50 dB at f = n × f_n, where n = 2, 3, 4, 5,…

26.33.9 Three-phase power and energy measurement (PEMMXU)

Table 269: Three-phase power and energy measurement (PEMMXU)

Characteristic	Value
Operation accuracy [208]	At all three currents in range 0.10…1.20 × In At all three voltages in range 0.50…1.15 × U_n At the frequency f_n ±1 Hz
	±1.5% for apparent power S
	±1.5% for active power P and active energy [209]
	±1.5% for reactive power Q and reactive energy [210]
	±0.015 for power factor
Suppression of harmonics	DFT: -50 dB at f = n × f_n, where n = 2, 3, 4, 5,…

[208] *Measurement mode* = "Pos Seq" (default)
[209] |PF| >0.5 which equals |cosϕ| >0.5
[210] |PF| <0.86 which equals |sinϕ| >0.5

26.33.10 Frequency measurement (FMMXU)

Table 270: Frequency measurement (FMMXU)

Characteristic	Value
Operation accuracy	±5 mHz (in measurement range 35...75 Hz)

26.33.11 Tap changer position indication (TPOSYLTC)

Table 271: Tap changer position indication (TPOSYLTC)

Characteristic	Value
Response time for binary inputs	Typically 100 ms

26.34 Power quality functions

26.34.1 Current total demand, harmonic distortion, DC component (TDD, THD, DC) and individual harmonics (CHMHAI)

Table 272: Current total demand, harmonic distortion, DC component (TDD, THD, DC) and individual harmonics (CHMHAI)

Characteristic	Value
Measurement accuracy [211]	±3.0% or ±0.2
Nominal frequency 50 Hz. Harmonics in the range 0…0.21 × fundamental amplitude.	±5.0 % or ±0.2 (12…30th harmonic)

26.34.2 Current total demand, harmonic distortion, DC component (TDD, THD, DC) and individual harmonics (CHMHAI) main settings

Table 273: Current total demand, harmonic distortion, DC component (TDD, THD, DC) and individual harmonics (CHMHAI) main settings

Parameter	Function	Value (Range)	Step
Sliding interval	CHMHAI	1 = 3 seconds 2 = 1 minute 3 = 5 minutes	-
Reference Cur Sel	CHMHAI	0 = fundamental 2 = absolute	-
Demand current	CHMHAI	0.10...1.00 × I_n	0.01

[211] Demand current = 1.0xIn

26.34.3 Voltage total harmonic distortion, DC component (THD, DC) and individual harmonics (VHMHAI)

Table 274: Voltage total harmonic distortion, DC component (THD, DC) and individual harmonics (VHMHAI)

Characteristic	Value
Measurement accuracy [212]	±3.0% or ±0.2
Nominal frequency 50 Hz. Harmonics in the range 0…0.21 × fundamental amplitude.	±5.0 % or ±0.2 (12…30th harmonic)

26.34.4 Voltage total harmonic distortion, DC component (THD, DC) and individual harmonics (VHMHAI) main settings

Table 275: Voltage total harmonic distortion, DC component (THD, DC) and individual harmonics (VHMHAI) main settings

Parameter	Function	Value (Range)	Step
Sliding interval	VHMHAI	1 = 3 seconds 2 = 1 minute 3 = 5 minutes	-

26.34.5 Voltage variation (PHQVVR)

Table 276: Voltage variation (PHQVVR)

Characteristic	Value
Operation accuracy	±1.5% of the set value or ±0.2% of reference voltage
Reset ratio	Typically 0.96 (Swell), 1.04 (Dip, Interruption)

26.34.6 Voltage variation (PHQVVR) main settings

Table 277: Voltage variation (PHQVVR) main settings

Parameter	Function	Value (Range)	Step
Voltage dip set 1	PHQVVR	10.0...100.0%	0.1
Voltage dip set 2	PHQVVR	10.0...100.0%	0.1
Voltage dip set 3	PHQVVR	10.0...100.0%	0.1
Voltage swell set 1	PHQVVR	100.0...140.0%	0.1
Voltage swell set 2	PHQVVR	100.0...140.0%	0.1
Voltage swell set 3	PHQVVR	100.0...140.0%	0.1
Voltage Int set	PHQVVR	0.0...100.0%	0.1
VVa Dur Max	PHQVVR	100...3600000 ms	100

[212] Amplitude > 0.2*Un

26.34.7 Voltage unbalance (VSQVUB)

Table 278: Voltage unbalance (VSQVUB)

Characteristic	Value
Operation accuracy	±1.5% of the set value or ±0.002 × U_n
Reset ratio	Typically 0.96

26.34.8 Voltage unbalance (VSQVUB) main settings

Table 279: Voltage unbalance (VSQVUB) main settings

Parameter	Function	Value (Range)	Step
Operation	VSQVUB	1 = on 5 = off	-
Unb detection method	VSQVUB	1 = Neg Seq 2 = Zero Seq 3 = Neg to Pos Seq 4 = Zero to Pos Seq 5 = Ph vectors Comp	-

26.35 Logging functions

26.35.1 Disturbance recorder, common functionality (RDRE) main settings

Table 280: Disturbance recorder, common functionality (RDRE) main settings

Parameter	function	Value (Range)	Step
Record length	RDRE	10...750 cycles	1
Pre-trg length	RDRE	0...100%	1
Operation mode	RDRE	1 = Overwrite 2 = Saturation	-
Storage rate	RDRE	128, 64, 32 samples per fundamental cycle	-

26.36 Other functionality

26.36.1 Pulse timer, eight channels (PTGAPC)

Table 281: Pulse timer, eight channels (PTGAPC)

Characteristic	Value
Operate time accuracy	±1.0% of the set value or ±20 ms

26.36.2 Time delay off, eight channels (TOFPAGC)

Table 282: Time delay off, eight channels (TOFPAGC)

Characteristic	Value
Operate time accuracy	±1.0% of the set value or ±20 ms

26.36.3 Time delay on, eight channels (TONGAPC)

Table 283: Time delay on, eight channels (TONGAPC)

Characteristic	Value
Operate time accuracy	±1.0% of the set value or ±20 ms

27. Mounting methods

With appropriate mounting accessories, the protection relay can be rack mounted, wall mounted, roof mounted or door mounted. The LHMI can be mounted either on a door or a surface, or in a tilted position (25°) using special accessories. It is also possible to rack mount or door mount the protection relay together with the LHMI.

Mounting options for the relay:

- Rack mounting
- Rack mounting with the LHMI
- Rack mounting with the LHMI including a provision for the RTXP 24 test switch
- Wall mounting
- Roof mounting
- Door mounting
- Door mounting with the LHMI

Mounting options for the HMI:

- Rack mounting
- Door mounting
- Mounting in a 25° tilt

28. Selection and ordering data

Relays-Online , a Next-Generation on-line product ordering tool, supports selection and ordering for ABB Digital Substation Products with emphasis on, but not exclusively for the Relion product family. Relays-Online is an easy to use, online tool always containing the latest product information and various product support materials. The complete order code can be created with detailed specifications and the result can be printed and mailed. Registration is recommended.

29. Modification Sales

Modification Sales is a concept that provides modification support for already delivered relays. Under Modification Sales it is possible to modify both the hardware and software capabilities of the existing relay. The same options are available as when a new relay variant is configured and ordered from the factory: it is possible to add new hardware modules into empty slots, change the type of the existing modules within the slots or add software functions by adding application and, if necessary, add-on packages. If it is needed to use the possibilities provided by the Modification Sales concept, please contact your local ABB unit. The information that is requested by ABB is a) Relay serial number, b) Relay order code and c) The requested modification, separately stated for each relay.

Modification Sales is based on license handling within the relay. Modifying the relay without proper new license from ABB puts the relay in internal relay failure mode.

30. Accessories and ordering data

Table 284: HMI

Item	Order number
LHMI, conformal coated (including mounting bracket kit)	2RCA033008A0901
SHMI, conformal coated (including mounting bracket kit)	2RCA033008A0902
0.5 m (1.6 ft) connection cable for HMI	1MRS120549-05
1.0 m (3.3 ft) connection cable for HMI	1MRS120549-1
2.0 m (6.6 ft) connection cable for HMI	1MRS120549-2
3.0 m (9.8 ft) connection cable for HMI	1MRS120549-3
5.0 m (16.4 ft) connection cable for HMI	1MRS120549-5
RJ-45 coupler for HMI service port	SYJ-ZBE 8A17

Table 285: Communication

Item	Order number
LC SFP plug-in connector for optical multimode media 100M	2RCA045621
LC SFP plug-in connector for optical single-mode media 100M, 20.0 km (12.4 mi)	2RCA045622
LC SFP plug-in connector for optical single-mode media 100M, 50.0 km (31.1 mi)	2RCA045623

Table 286: Mounting

Item	Order number
Back wall / side wall mounting kit standard housing	2RCA040872A0001
Back wall / side wall mounting kit narrow housing	2RCA058741A0001
Roof mounting kit standard housing	2RCA040873A0001
Roof mounting kit narrow housing	2RCA060365A0001
Door mounting with LHMI standard housing	2RCA040882A0001
Door mounting with LHMI narrow housing	2RCA058742A0001
19 inch relay rack mounting with HMI standard housing, 7U	2RCA041125A0001
19 inch relay rack mounting without HMI standard housing, 7U	2RCA041127A0001
19 inch relay rack mounting with HMI one narrow unit, 7U	2RCA058747A0001
19 inch relay rack mounting without HMI one narrow unit, 7U	2RCA058746A0001
19 inch relay rack mounting with HMI two narrow units, 7U	2RCA058750A0001
19 inch relay rack mounting without HMI two narrow units, 7U	2RCA058749A0001
Surface mounting kit for HMI	2RCA038783A0001
Tilt mounting kit for HMI	2RCA038782A0001
Grounding bar kit for RTD module	2RCA039981A0001
19 inch relay rack mounting for standard housing and HMI, including a provision for RTXP 24 test switch, 6U	2RCA051498A0001
19 inch relay rack mounting for narrow housing and HMI, including a provision for RTXP 24 test switch, 6U	2RCA060414A0001
19 inch relay rack mounting for standard housing and HMI, including a provision for RTXP 24 test switch, 7U	2RCA051503A0001
19 inch relay rack mounting for narrow housing and HMI, including a provision for RTXP 24 test switch, 7U	2RCA060417A0001

Table 287: Arc sensors

Item	Order number
ARC lens sensor cable 1.5 m (4.9 ft)	2RCA040290A0001
ARC lens sensor cable 3.0 m (9.8 ft)	2RCA040290A0003
ARC lens sensor cable 5.0 m (16.4 ft)	2RCA040290A0005
ARC lens sensor cable 7.5 m (24.6 ft)	2RCA040290A0007
ARC lens sensor cable 15.0 m (49.2 ft)	2RCA040290A0015
ARC loop sensor cable 5.0 m (16.4 ft), plastic fiber	2RCA051658A0005
ARC loop sensor cable 10.0 m (32.8 ft), plastic fiber	2RCA051658A0010
ARC loop sensor cable 15.0 m (49.2 ft), plastic fiber	2RCA051658A0015
ARC loop sensor cable 20.0 m (65.6 ft), plastic fiber	2RCA051658A0020
ARC loop sensor cable 25.0 m (82.0 ft), plastic fiber	2RCA051658A0025
ARC loop sensor cable 30.0 m (98.4 ft), plastic fiber	2RCA051658A0030
ARC loop sensor cable 40.0 m (131.2 ft), glass fiber	2RCA041050A0040
ARC loop sensor cable 50.0 m (164.0 ft), glass fiber	2RCA041050A0050
ARC loop sensor cable 60.0 m (196.9 ft), glass fiber	2RCA041050A0060
Blind extension cable for ARC loop sensors, 2.0 m (6.6 ft), to be used with plastic fiber loops only	2RCA051662A0001
ARC sensor fiber, 100 m, delivery length	1MSC 380018.100
ARC sensor fiber, 300 m, delivery length	1MSC 380018.300
ARC sensor fiber, 500 m, delivery length	1MSC 380018.500
ARC sensor fiber connector (25 pcs.)	SJG BP05226-02
ARC sensor fiber connector spacer sleeve (25 pcs.)	2RCA056821

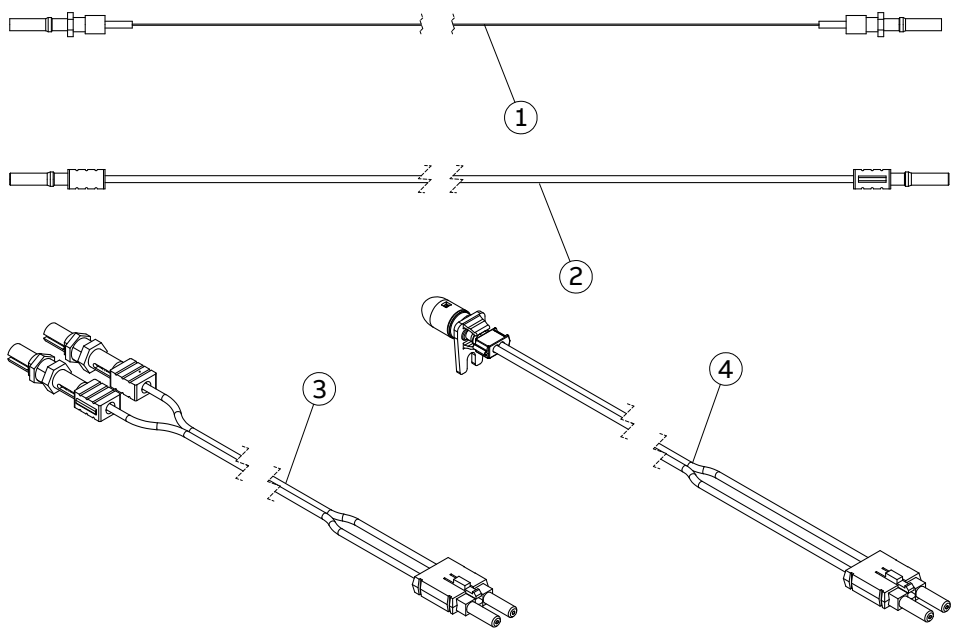

1 ARC loop sensor cable, glass fiber
2 ARC loop sensor cable, plastic fiber
3 Blind extension cable for ARC loop sensors
4 ARC lens sensor cable

Figure 30: Arc sensors and accessories

Table 288: Connectors

Item	Order number
Compression-type signal connectors	SYJ-ZRK 2Z18P1
Ring-lug type signal connectors	SYJ-ZRK 33X18
Push-in type signal connectors	SYJ-ZRK 53P18PM
1 CT-1 VT compression-type connector	2RCA040474A0004
2 CT-3 VT compression-type connector	2RCA059766A0001
2 CT-3 VT ring-lug type connector	2RCA059767A0001
5 CT compression-type connector	2RCA040474A0001
5 VT compression-type connector	2RCA040474A0002
1 CT-4 VT compression-type connector	2RCA040474A0003
1 CT-1 VT ring-lug type connector	2RCA041297A0004
5 CT ring-lug type connector	2RCA041297A0001
5 VT ring-lug type connector	2RCA041297A0002
1 CT-4 VT ring-lug type connector	2RCA041297A0003
RS-485/IRIG-B connector	SYJ-ZRK 44P10
HMI power supply connector	SYJ-ZRK 45X3[213]

31. Tools

The protection relay is delivered with the correct protection and control functionality included but it needs some engineering to fit in the needed application. The default parameter setting values can be changed from the HMI, the Web browser-based user interface (WHMI) or Protection and Control IED Manager PCM600 in combination with the relayspecific connectivity package.

PCM600 offers extensive relay configuration functions. For example, the setting parameters, relay application, graphical display and IEC 61850 communication, including horizontal GOOSE communication, can be modified with PCM600.

The REX640 relay's LHMI pages can be customized and shared between devices with a dedicated Display Editor which offers intuitive graphical drawing tools with editable symbols for single-line diagrams. In addition, it is possible to create personalized views for every supported application. The page access can be customized for every user to enable simple operational usage for all user levels.

When the WHMI is used, the protection relay can be accessed from any of the relay's access points, including the Ethernet connection on the LHMI. For security reasons, the WHMI is disabled by default, but it can be enabled via the LHMI. The WHMI functionality can be limited to read-only access.

Table 289: Tools

Description	Version
PCM600	2.14 HF4 or later
Web browser	Microsoft Edge, Google Chrome and Mozilla Firefox
REX640 connectivity package	6.3 or later

Table 290: Supported functions

Function	Web HMI	PCM600
Relay parameter setting	•	•
Saving of relay parameter settings in the relay	•	•
Signal monitoring	•	•
Disturbance recorder handling	•	•
Alarm LED viewing	•	•
Access control management	•	•
Relay signal configuration (Signal Matrix)	-	•
Modbus® communication configuration (communication management)	-	•
DNP3 communication configuration (communication management)	-	•
IEC 60870-5-103 communication configuration (communication management)	-	•
Saving of relay parameter settings in the tool	-	•
Disturbance record analysis	-	•

Table continues on the next page

213 Compatible alternative connector with screw flange fastening Weidmüller 1944340000.

Function	Web HMI	PCM600
XRIO parameter export/import	●	●
Graphical display configuration	-	●
Application configuration	-	●
IEC 61850 communication configuration, GOOSE (communication configuration)	-	●
Phasor diagram viewing	●	-
Event viewing	●	●
Saving of event data on the user's PC	●	●
SMV and GOOSE diagnostics on Web HMI	-	●

● = Supported

The relay connectivity package is a collection of software and specific relay information which enables system products and tools to connect and interact with the protection relay. The connectivity packages reduce the risk of errors in system integration, minimizing device configuration and setup times.

Further, the connectivity package for REX640 includes a flexible tool to update relay LHMI languages and new functionalities to the protection relay. The flexible modification support of the relay enables adding new protection functionalities whenever the protection and control needs are changing.

32. Module diagrams

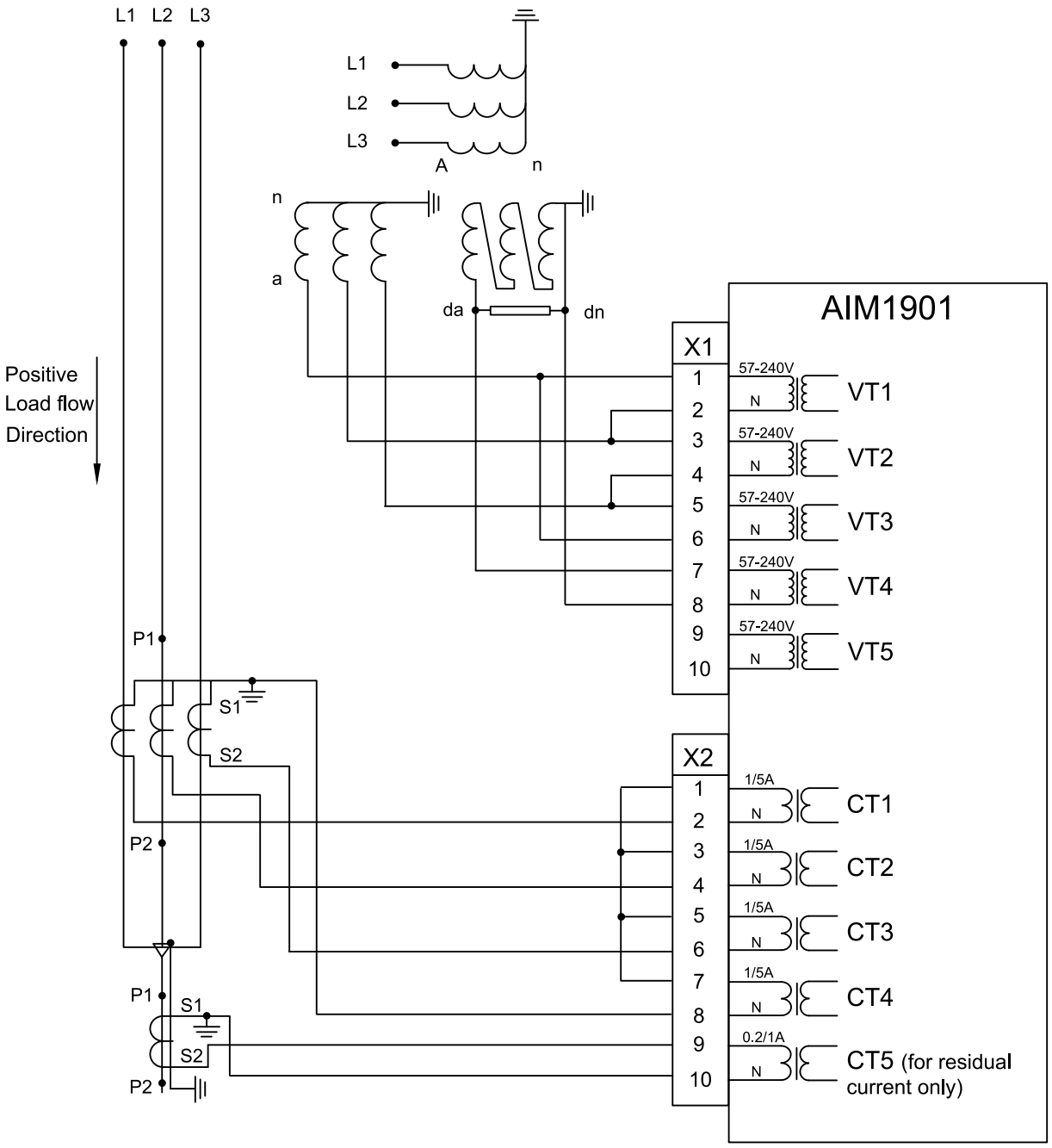

Figure 31: AIM1901 module

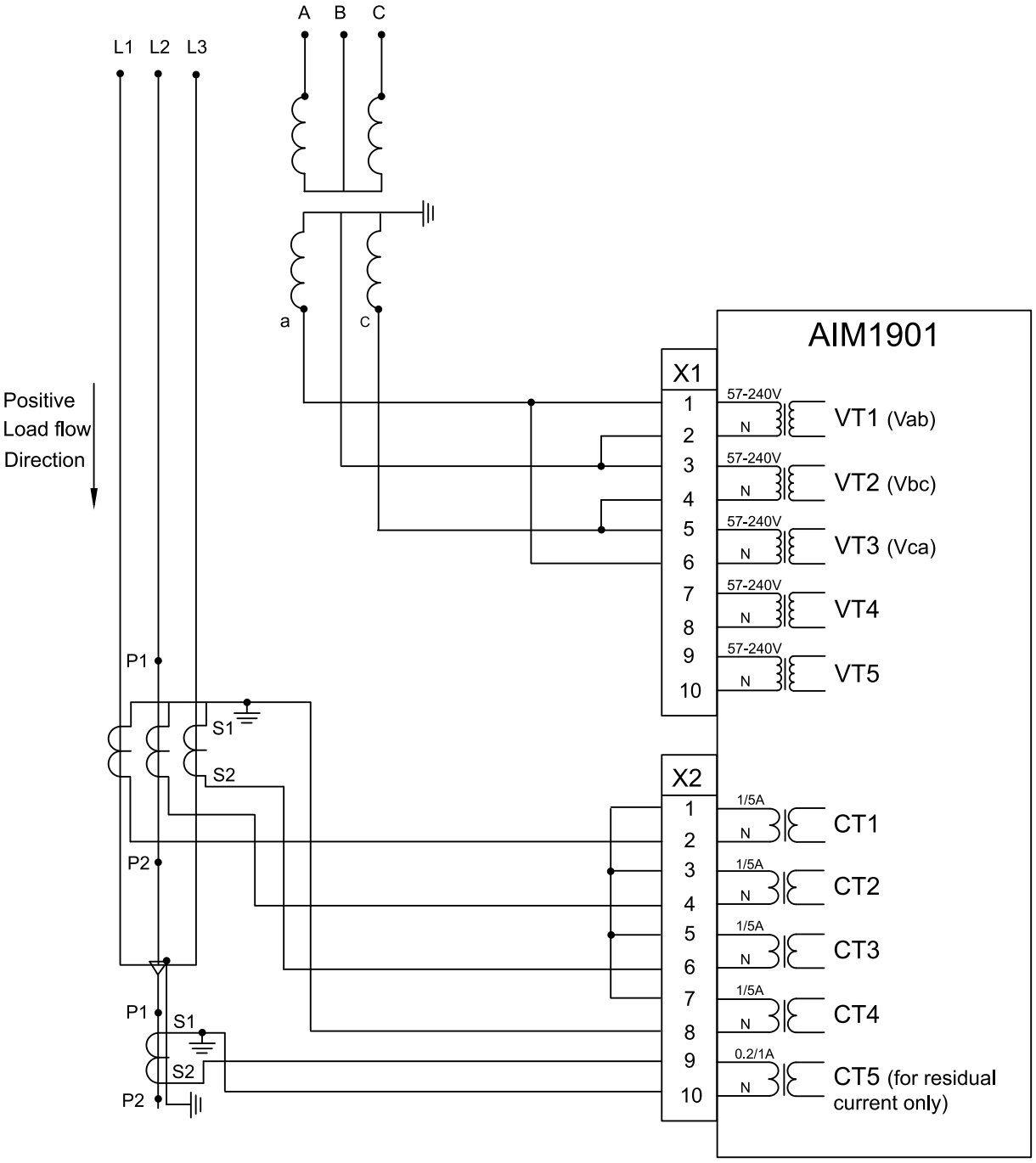

Figure 32: AIM1901 module (two phase-to-phase VTs)

The two phase-to-phase VT connection is often referred as “open delta” (ANSI) or as “V” (IEC) connection. The relay measures all three phase-to-phase voltages using only two primary VTs.

The relay will calculate the phase-to-ground voltages internally, with the assumption that the three-phase system is balanced, i.e. residual voltage is zero.

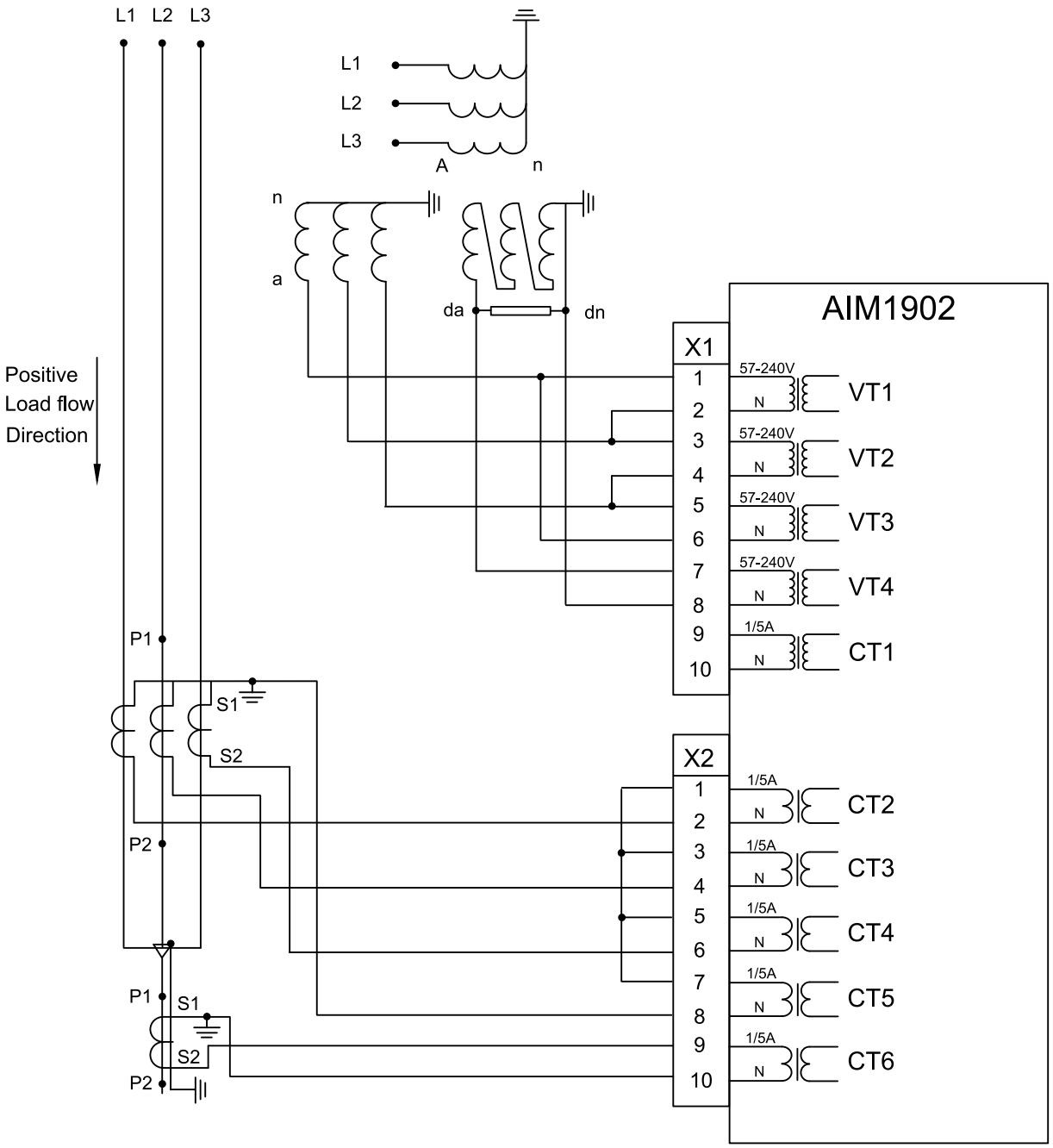

Figure 33: AIM1902 module

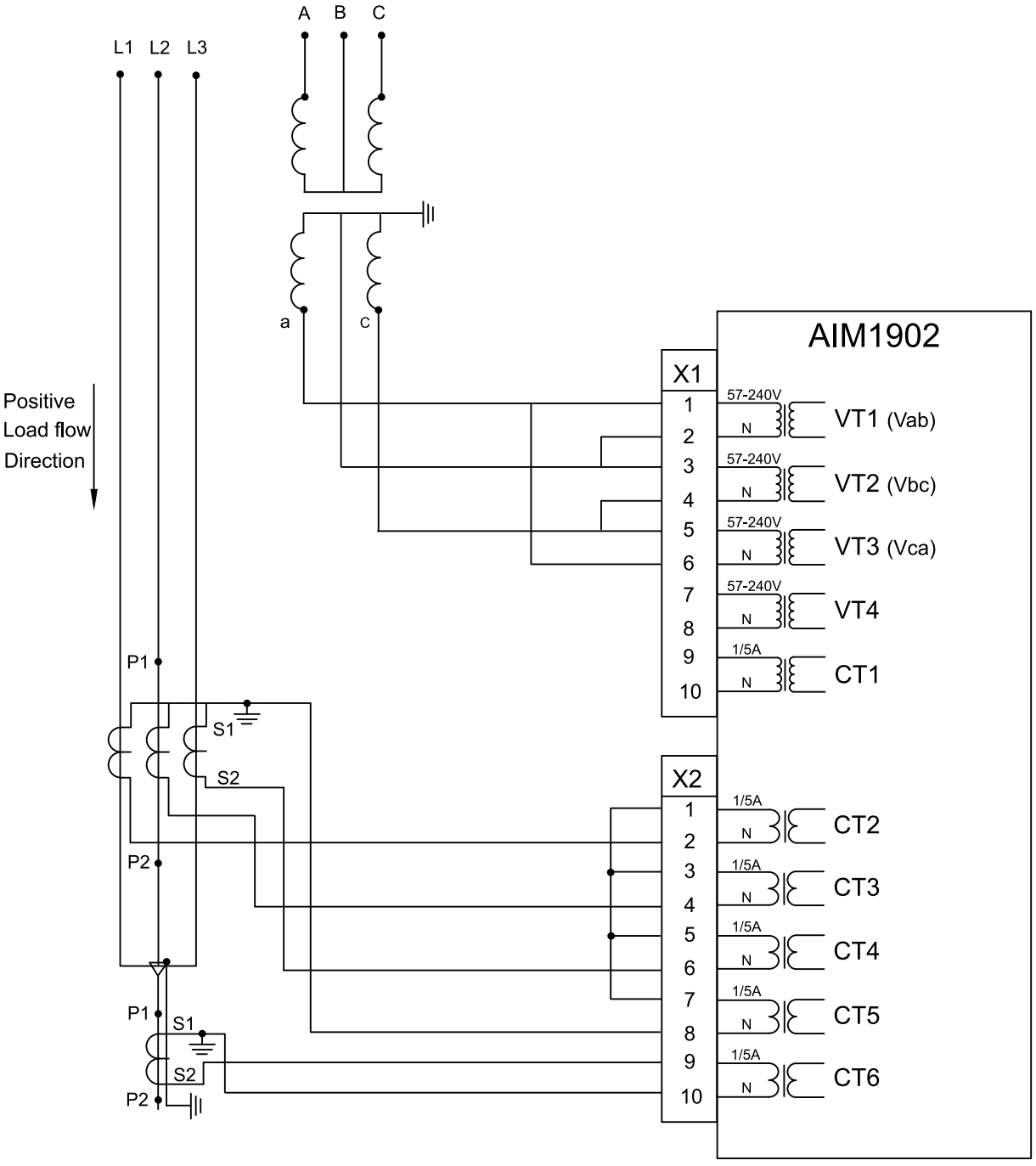

Figure 34: AIM1902 module (two phase-to-phase VTs)

The two phase-to-phase VT connection is often referred as “open delta” (ANSI) or as “V” (IEC) connection. The relay measures all three phase-to-phase voltages using only two primary VTs.

The relay will calculate the phase-to-ground voltages internally, with the assumption that the three-phase system is balanced, i.e. residual voltage is zero.

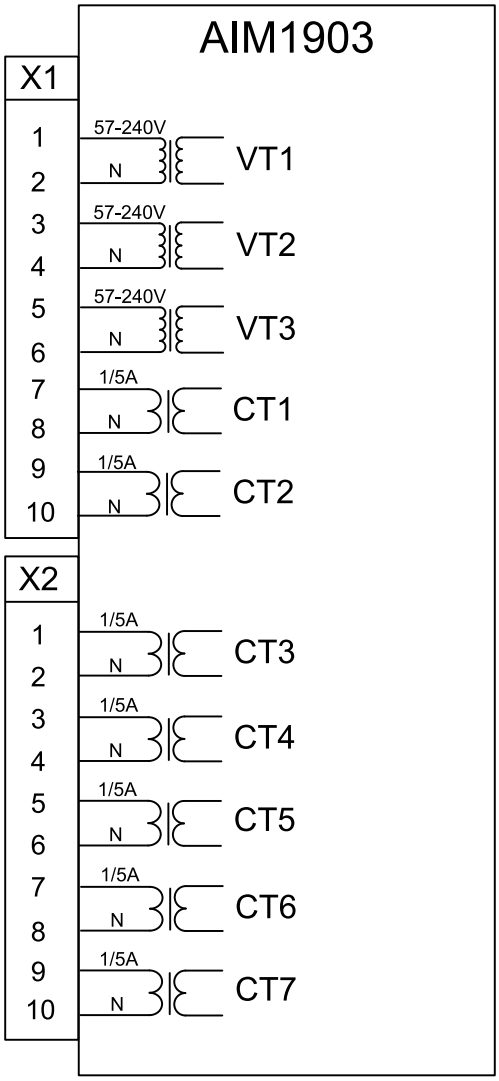

Figure 35: AIM1903

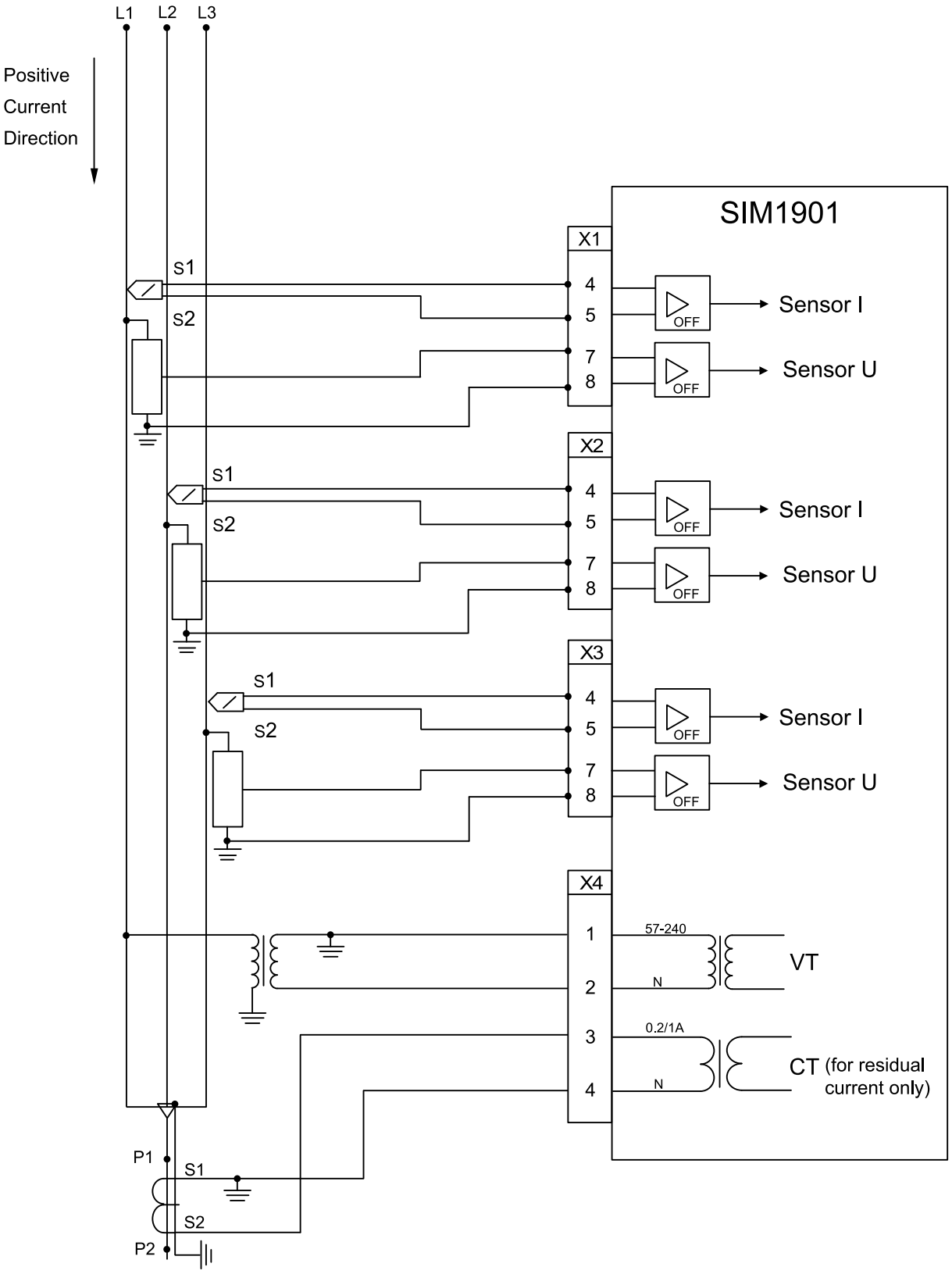

Figure 36: SIM1901 module (VT primary connection phase-to-earth)

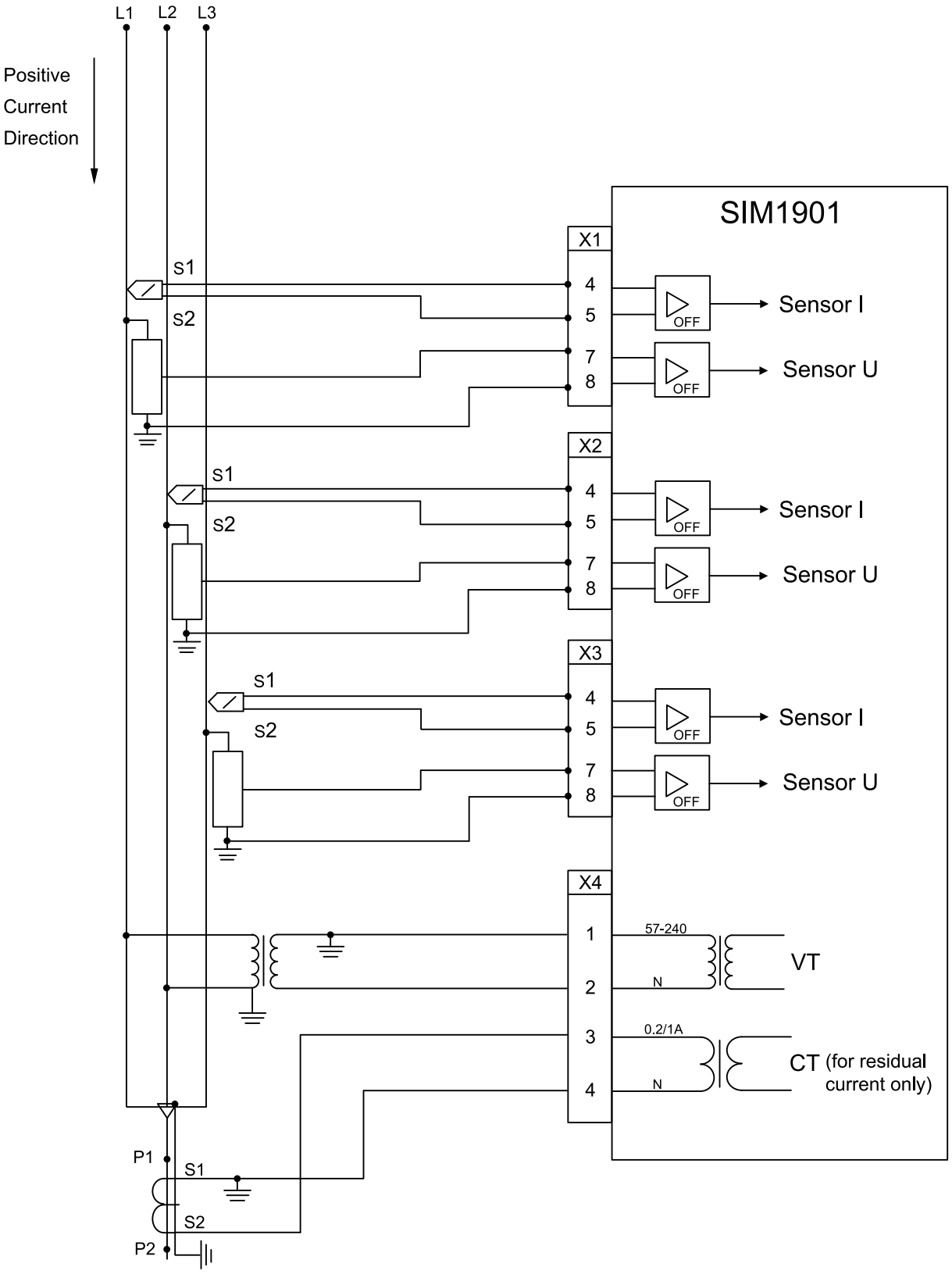

Figure 37: SIM1901 module (VT primary connection phase-to-phase)

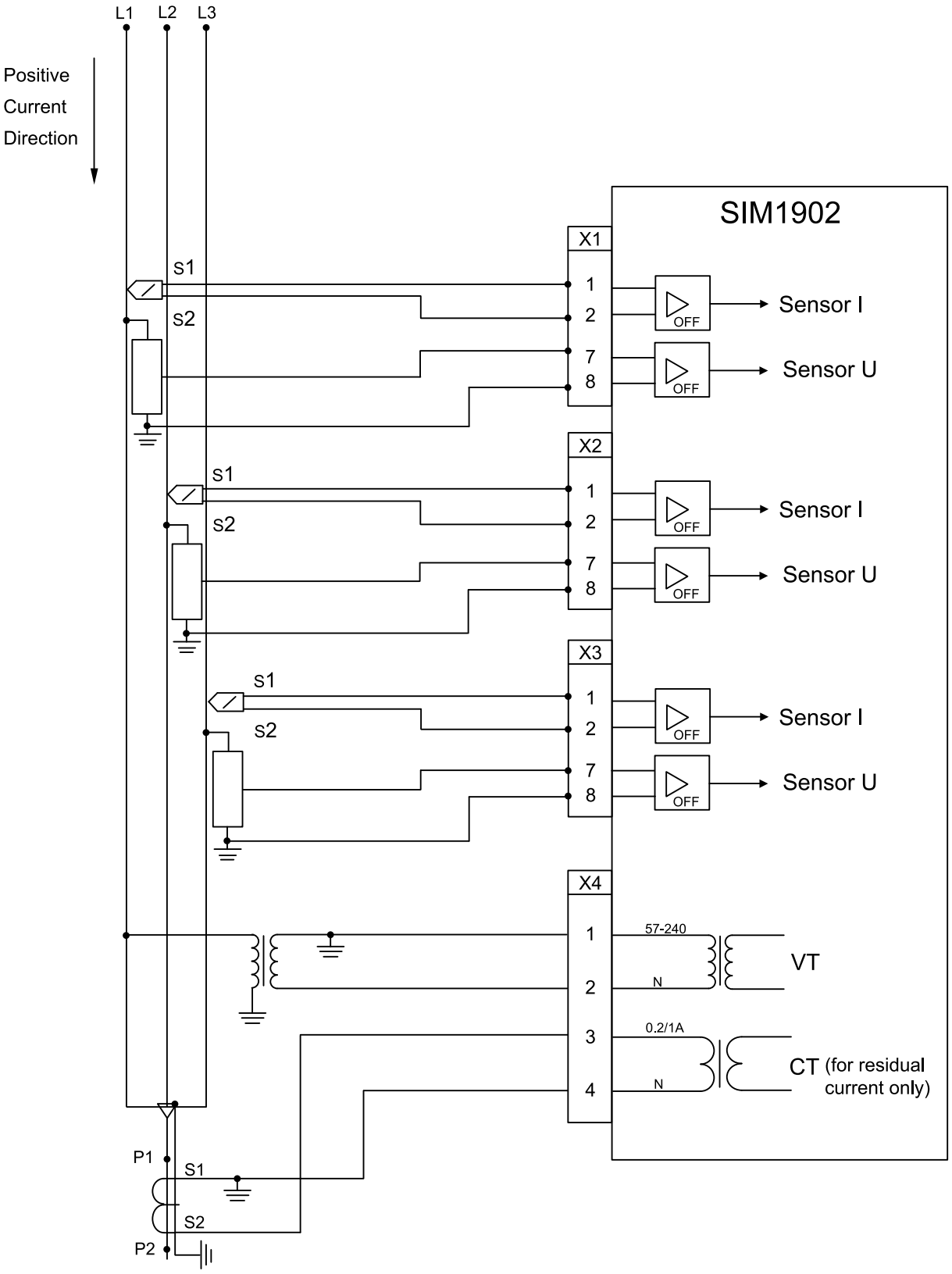

Figure 38: SIM1902 module (VT primary connection phase-to-earth)

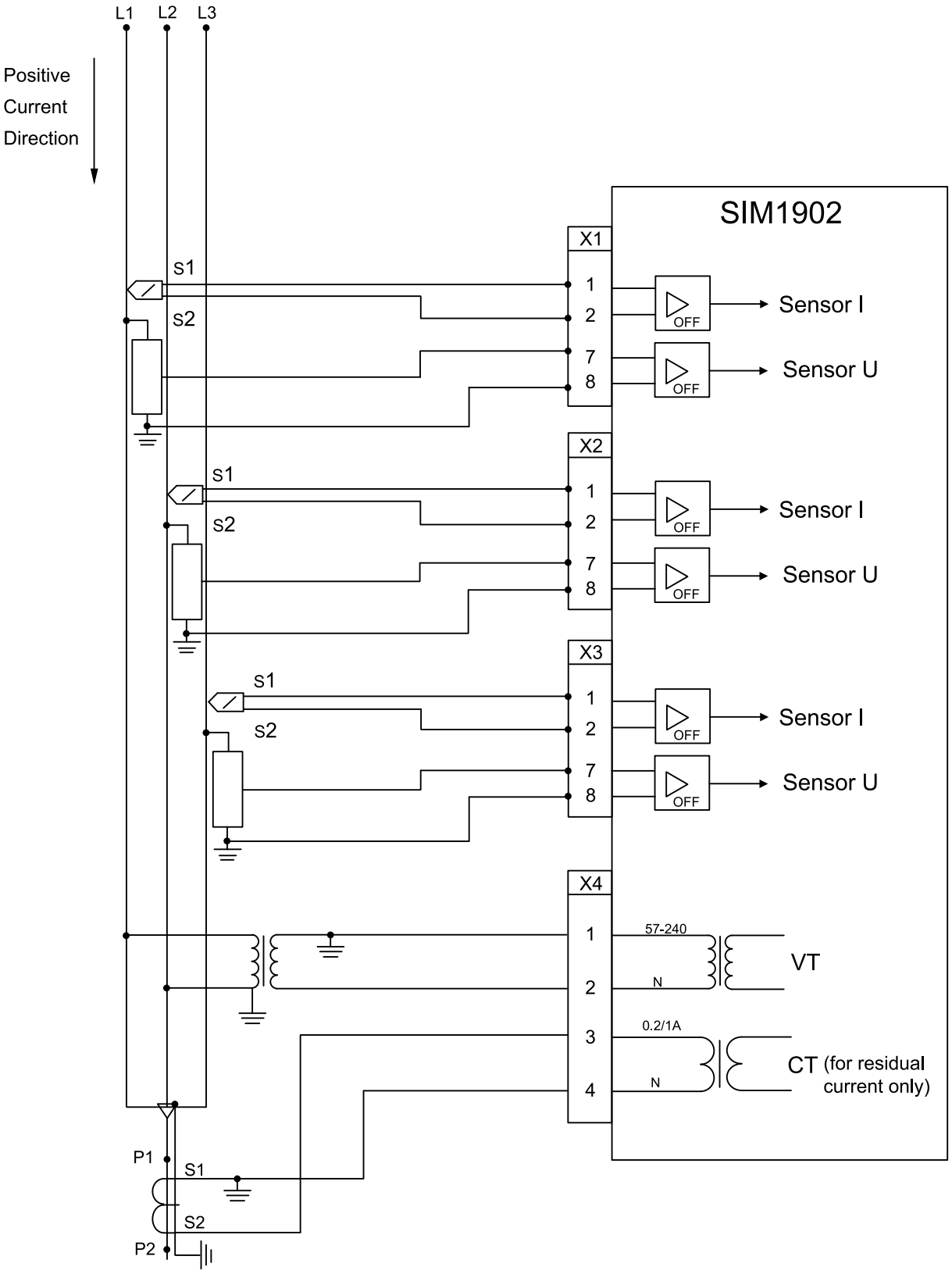

Figure 39: SIM1902 module (VT primary connection phase-to-phase)

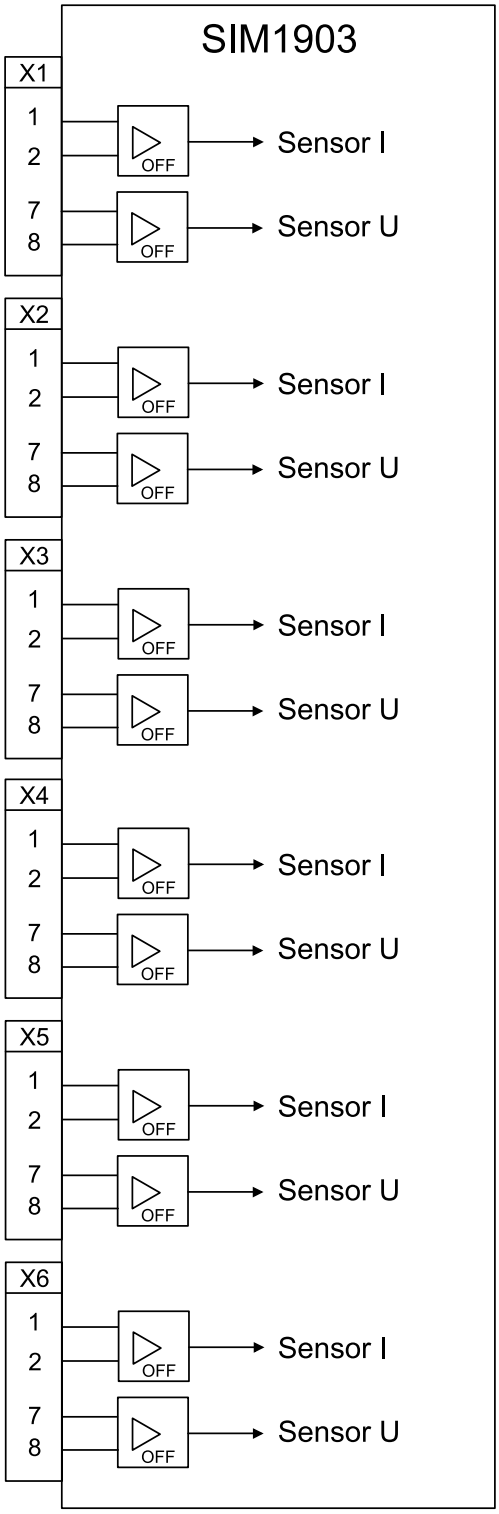

Figure 40: SIM1903

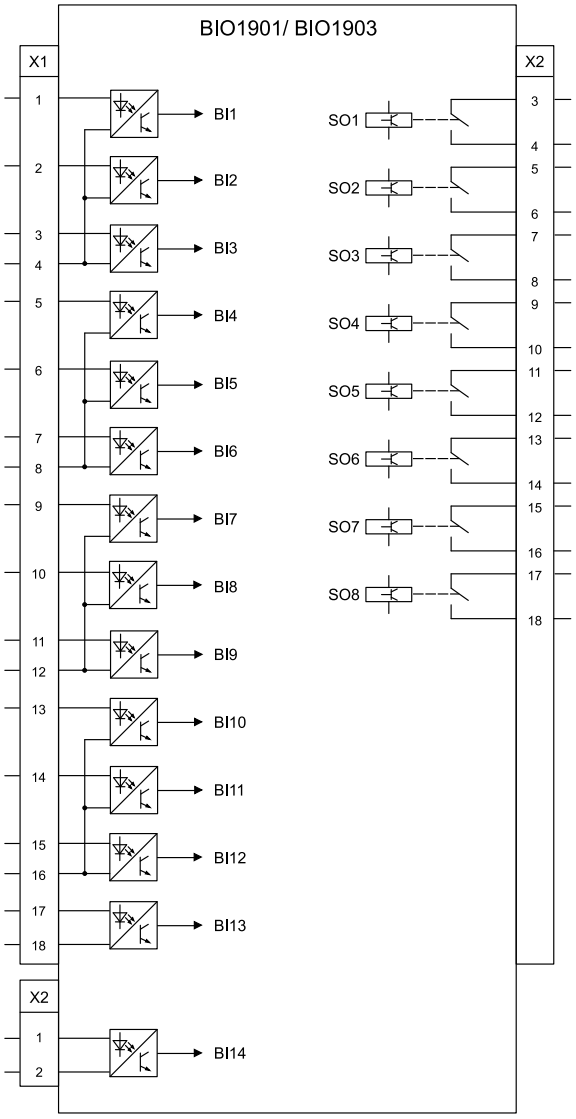

Figure 41: BIO1901/BIO1903 modules

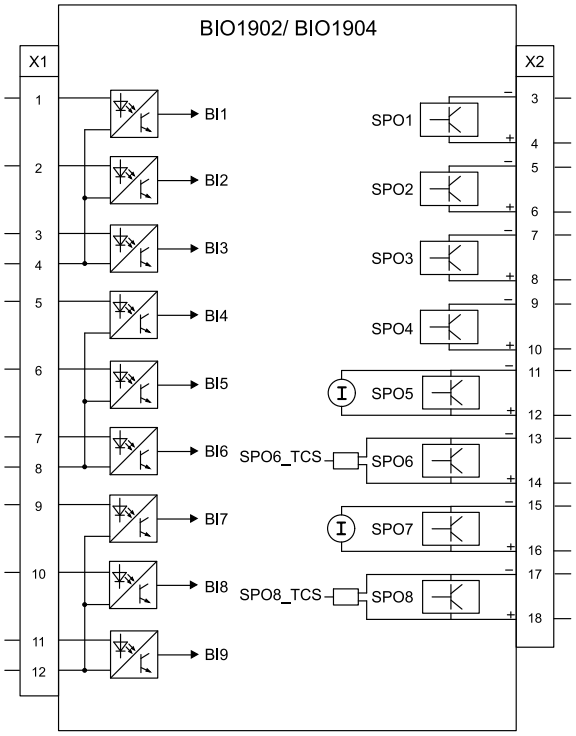

Figure 42: BIO1902/BIO1904 modules

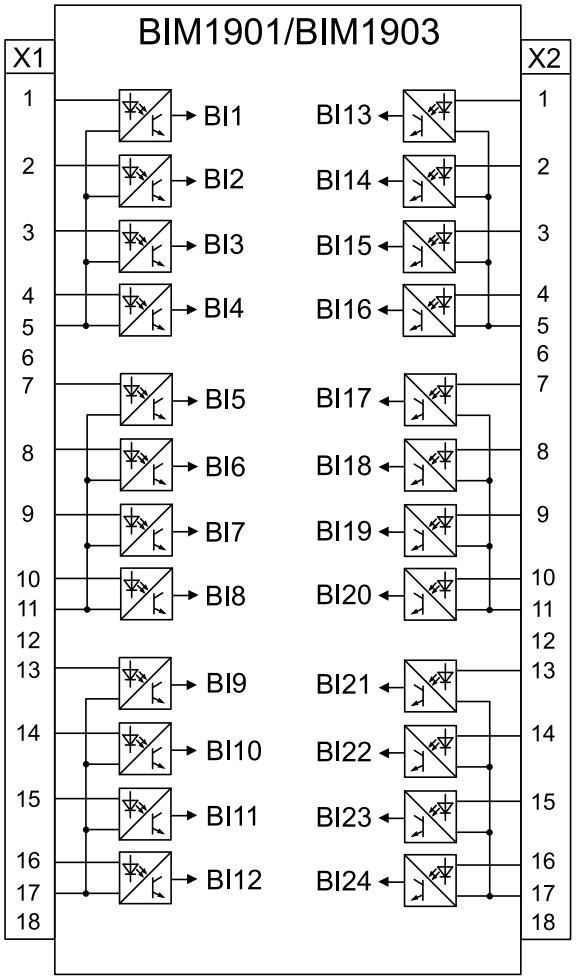

Figure 43: BIM1901/BIM1903

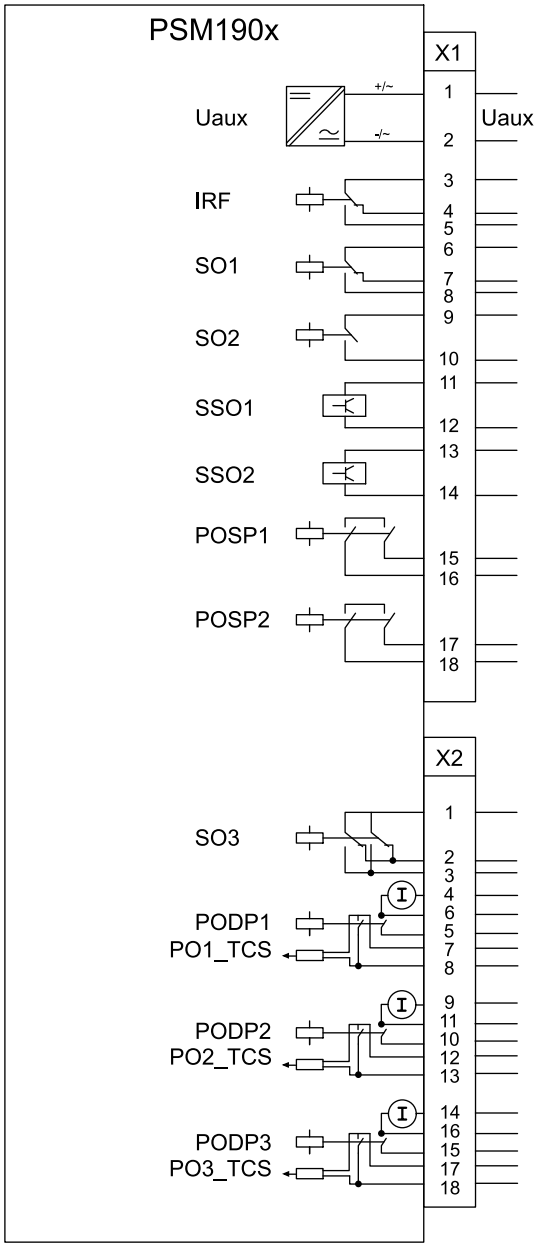

Figure 44: PSM190x module

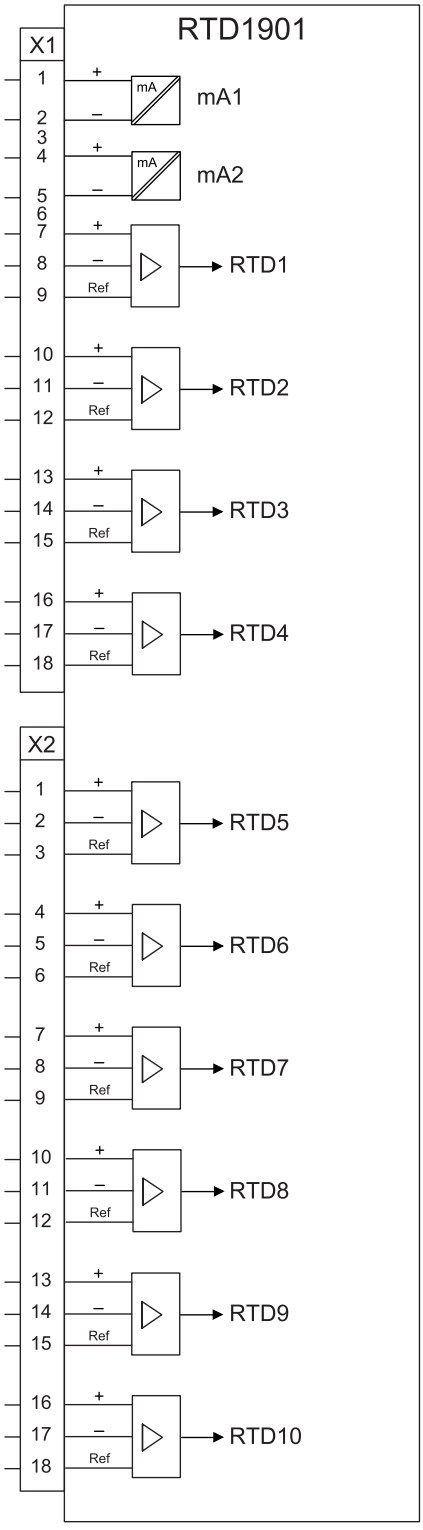

Figure 45: RTD1901 module

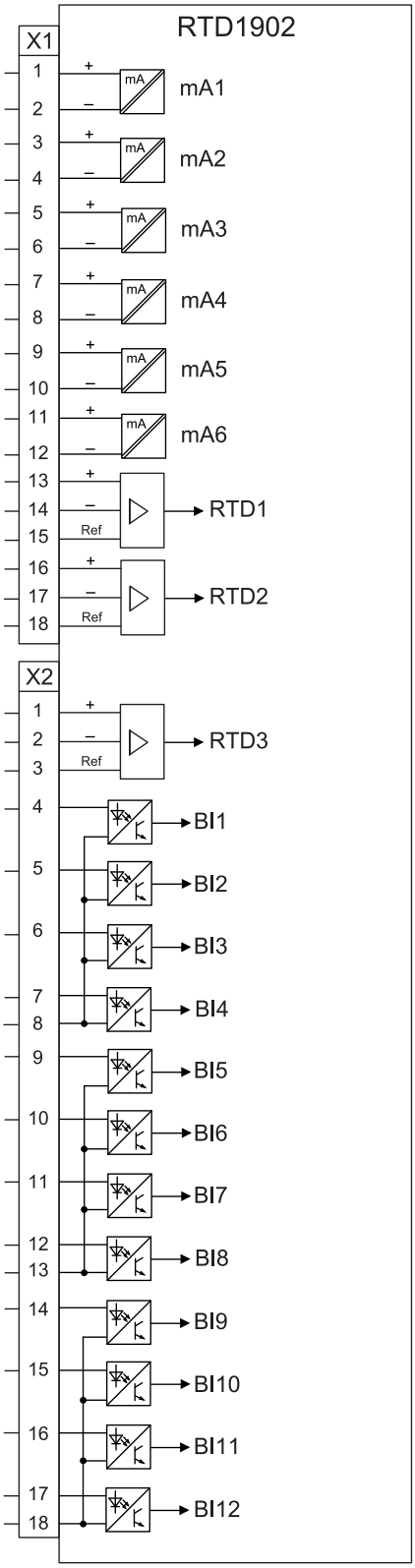

Figure 46: RTD1902 module

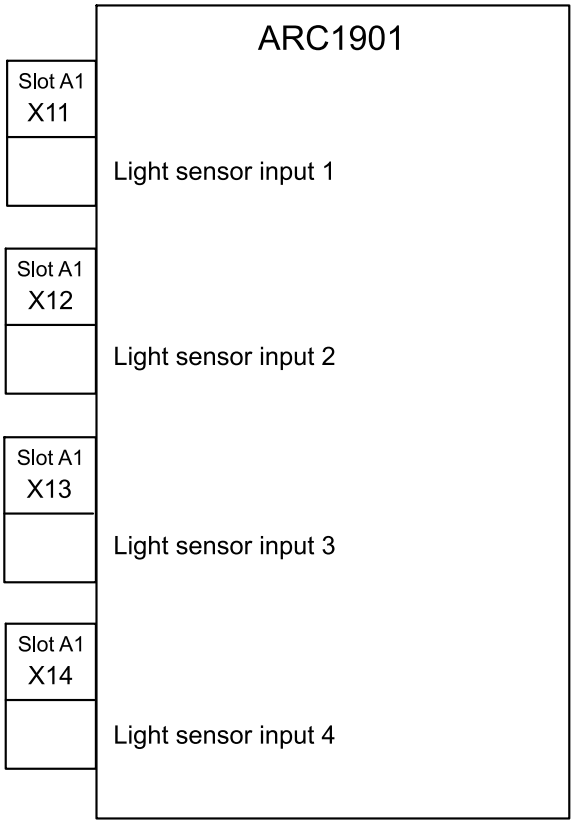

Figure 47: Arc module

33. Certificates

DNV GL has issued an IEC 61850 Edition 2 with Amendment 1 Certificate Level A1 for REX640 Protection and Control relay. Certificate number: 10358145-DSO 22-3007.

Additional certificates can be found on the *product page*.

34. References

The *www.abb.com/substationautomation* portal provides information on the entire range of distribution automation products and services.

The latest relevant information on the REX640 protection and control relay is found on the *product page*. Scroll down the page to find and download the related documentation.

35. REX640 Functions, codes and symbols

Table 291: REX640 Functions included in the relay

Function	IEC 61850	IEC 60617	ANSI
Protection			
Distance protection	DSTPDIS	Z<	21P,21N
Local acceleration logic	DSTPLAL	LAL	21LAL
Scheme communication logic	DSOCPSCH	CL	85 21SCHLGC
Phase segregated scheme communication logic	SPDSOCPSCH	CLSP	85 21SCHLGCSP
Current reversal and weak-end infeed logic	CRWPSCH	CLCRW	85 21CREV,WEI
Phase segregated current reversal and weak-end infeed logic	SPCRWPSCH	CLCRWSP	85 21CREV,WEISP
Communication logic for residual overcurrent	RESCPSCH	CLN	85 67G/N SCHLGC
Current reversal and weak-end infeed logic for residual overcurrent	RCRWPSCH	CLCRWN	85 67G/N CREV,WEI
Power swing detection	DSTRPSB	Zpsb	68
Line differential protection with inzone power transformer	LNPLDF	3Id/I>	87L
Line differential protection (SMV based)	LN2PLDF	3Id/I> SMV/2T	87L SMV/2T
Binary signal transfer	BSTGAPC	BST	BST
Switch-onto-fault protection	CVPSOF	CVPSOF	SOTF
Three-phase non- directional overcurrent protection, low stage	PHLPTOC	3I>	51P-1
Three-phase non- directional overcurrent protection, high stage	PHHPTOC	3I>>	51P-2
Three-phase non- directional overcurrent protection, instantaneous stage	PHIPTOC	3I>>>	50P
Three-phase non-directional overcurrent protection, instantaneous only stage	PHIPIOC	3I>>>>	50P
Three-phase non-directional long time overcurrent protection	PHLTPTOC	3I>	51LT
Three-phase directional overcurrent protection, low stage	DPHLPDOC	3I>->	67P/51P-1
Three-phase directional overcurrent protection, high stage	DPHHPDOC	3I>>->	67P/51P-2
Non-directional earth-fault protection, low stage	EFLPTOC	Io>	51G/51N-1
Non-directional earth-fault protection, high stage	EFHPTOC	Io>>	51N-2
Non-directional earth-fault protection, instantaneous stage	EFIPTOC	Io>>>	50G/50N
Non-directional earth-fault protection, instantaneous only stage	EFIPIOC	Io>>>>	50G/50N
Non-directional earth-fault protection with faulty phase identification, low stage	EFPLPTOC	Io>	51G/51N-1
Non-directional earth-fault protection with faulty phase identification, high stage	EFPHPTOC	Io>>	51N-2
Non-directional earth-fault protection with faulty phase identification instantaneous stage	EFPIPTOC	Io>>>	50G/50N
Directional earth-fault protection, low stage	DEFLPDEF	Io>->	67G/N-1 51G/N-1
Directional earth-fault protection, high stage	DEFHPDEF	Io>>->	67G/N-1 51G/N-2
Directional earth-fault protection with faulty phase identification, low stage	DEFPLPDEF	Io>->	67G/N-1 51G/N-1

Table continues on the next page

Function	IEC 61850	IEC 60617	ANSI
Directional earth-fault protection with faulty phase identification, high stage	DEFPHPDEF	Io>>->	67G/N-1 51G/N-2
Three-phase power directional element	DPSRDIR	I1 ->	67P-TC
Neutral power directional element	DNZSRDIR	I2->,Io->	67N-TC
Admittance-based earth-fault protection	EFPADM	Yo>->	21YN
Multifrequency admittance-based earth-fault protection	MFADPSDE	Io>->Y	67NYH
Wattmetric-based earth-fault protection	WPWDE	Po>->	32N
Transient/intermittent earth-fault protection	INTRPTEF	Io>->IEF	67NTEF/NIEF
Harmonics-based earth-fault protection	HAEFPTOC	Io>HA	51NH
Touch voltage based earth-fault current protection	IFPTOC	IF>/UT>	46SNQ/59N
Negative-sequence overcurrent protection	NSPTOC	I2>M	46M
Phase discontinuity protection	PDNSPTOC	I2/I1>	46PD
Residual overvoltage protection	ROVPTOV	Uo>	59G/59N
Three-phase undervoltage protection	PHPTUV	3U<	27
Three-phase overvoltage variation protection	PHVPTOV	3Urms>	59.S1
Three-phase overvoltage protection	PHPTOV	3U>	59
Positive-sequence overvoltage protection	PSPTOV	U1>	59PS
Positive-sequence undervoltage protection	PSPTUV	U1<	27PS
Negative-sequence overvoltage protection	NSPTOV	U2>	47,59NS
Frequency protection	FRPFRQ	f>/f<,df/dt	81
Three-phase voltage-dependent overcurrent protection	PHPVOC	3I(U)>	51V
Overexcitation protection	OEPVPH	U/f>	24
Three-phase thermal protection for feeders, cables and distribution transformers	T1PTTR	3Ith>F	49F
Three-phase thermal overload protection, two time constants	T2PTTR	3Ith>T/G/C	49T/G/C
Three-phase overload protection for shunt capacitor banks	COLPTOC	3I>3I<	51,37,86C
Current unbalance protection for shunt capacitor banks	CUBPTOC	dI>C	60N
Three-phase current unbalance protection for shunt capacitor banks	HCUBPTOC	3dI>C	60P
Shunt capacitor bank switching resonance protection, current based	SRCPTOC	TD>	55ITHD
Compensated neutral unbalance voltage protection	CNUPTOV	CNU>	59NU
Phase voltage differential protection for shunt capacitor banks	CPHPTDV	3dU>	87V
Directional negative- sequence overcurrent protection	DNSPDOC	I2>->	67Q
Low-voltage ride- through protection	LVRTPTUV	UU	27RT
Voltage vector shift protection	VVSPPAM	VS	78VS
Directional reactive power undervoltage protection	DQPTUV	Q>-> ,3U<	32Q,27
Reverse power/ directional overpower protection	DOPPDPR	P>/Q>	32R/32O
Underpower protection	DUPPDPR	P<	32U
Three-phase under impedance protection	UZPDIS	ZZ	21G
Directional negative sequence impedance protection	DNZPDIS	Z2->	Z2Q
Three-phase under excitation protection	UEXPDIS	X<	40
Third harmonic-based stator earth-fault protection	H3EFPSEF	dUo>/Uo3H	64TN
Rotor earth-fault protection (injection method)	MREFPTOC	Io>R	64R
Generator shaft leakage current	GSLPTOC	I>,GS	38, 51

Table continues on the next page

Function	IEC 61850	IEC 60617	ANSI
Thermal overload protection for rotors	RPTTR	3Ith>R	49R
High-impedance or flux-balance based differential protection	MHZPDIF	3dIHi>M	87HIM
Out-of-step protection with double blinders	OOSRPSB	OOS	78PS
Negative-sequence overcurrent protection for machines	MNSPTOC	I2>M	46M
Loss of phase, undercurrent	PHPTUC	3I<	37
Loss of load supervision	LOFLPTUC	3I<	37
Motor load jam protection	JAMPTOC	Ist>	50TDJAM
Motor start-up supervision	STTPMSU	Is2t n<	49,66,48,50TDLR
Motor start counter	MSCPMRI	n<	66
Phase reversal protection	PREVPTOC	I2>>	46R
Thermal overload protection for motors	MPTTR	3Ith>M	49M
Stabilized and instantaneous differential protection for machines	MPDIF	3dI>M/G	87M/87G
Underpower factor protection	MPUPF	PF<	55U
Stabilized and instantaneous differential protection for two- or three- winding transformers	TR3PTDF	3dI>3W	87T3
Stabilized and instantaneous differential protection for two-winding transformers	TR2PTDF	3dI>T	87T
Numerical stabilized low-impedance restricted earth-fault protection	LREFPNDF	dIoLo>	87NLI
High-impedance based restricted earth- fault protection	HREFPDIF	dIoHi>	87NHI
High-impedance differential protection for phase A	HIAPDIF	dHi_A>	87_A
High-impedance differential protection for phase B	HIBPDIF	dHi_B>	87_B
High-impedance differential protection for phase C	HICPDIF	dHi_C>	87_C
Stub protection	STBPDIF	3dI>STUB	87STUB
Circuit breaker failure protection	CCBRBRF	3I>/Io>BF	50BF
Circuit breaker failure protection - single phase breakers	SPCCBRBRF	3I>/Io>BFSP	50BFSP
Circuit breaker pole discrepancy protection	CBPDSC	CBPD	52PD
Three-phase inrush detector	INRPHAR	3I2f>	68HB
Residual current inrush detector	RINRPHAR	Io2f>	68HBG/N
Master trip	TRPPTRC	Master Trip	94/86
Master trip - single phase	SPTRPPTRC	Master trip SP	94/86SP
Arc protection	ARCSARC	ARC	AFD
High-impedance fault detection	PHIZ	HIF	HIZ
Fault locator	SCEFRFLO	FLOC	FLOC
Load-shedding and restoration	LSHDPFRQ	UFLS/R	81LSH
Load shedding step selector	LSHDGAPC	LSHDGAPC	LSHDGAPC
Multipurpose protection	MAPGAPC	MAP	MAP
Accidental energization protection	GAEPVOC	U<,I>	50/27
Load blinder	LBRDOB	LB	21LB
Cable end protection	CEPNDF	dIo>	87N
Cold load pickup	CLPGAPC	CLP	62CLD
Current disturbance detector	CDDPTOC	I>>>CDD	50DD
Faulty phase supervision for earth fault	FPHRPHS	FPS	FPS
Control			
Circuit-breaker control	CBXCBR	I <-> O CB	52

Table continues on the next page

Function	IEC 61850	IEC 60617	ANSI
Circuit-breaker control - single phase circuit breakers	SCBXCBR	I <-> O CBSP	52SP
Three-state disconnector control	P3SXSWI	I<->O P3S	29DS/GS
Disconnector control	DCXSWI	I <-> O DCC	29DS
Earthing switch control	ESXSWI	I <-> O ESC	29GS
Three-state disconnector position indication	P3SSXSWI	I<->O P3SS	29DS/GS
Disconnector position indication	DCSXSWI	I <-> O DC	29DS
Earthing switch position indication	ESSXSWI	I <-> O ES	29GS
Emergency start-up	ESMGAPC	ESTART	EST,62
Autoreclosing	DARREC	O->I	79
Autoreclosing - single phase	SPARREC	O -> I SP	79SP
Autosynchronizer for generator breaker	ASGCSYN	AUTOSYNCG	25AUTOSYNCG
Autosynchronizer for network breaker	ASNSCSYN	AUTOSYNC	25AUTOSYNCBT/T
Autosynchronizer co-ordinator	ASCGAPC	AUTOSYNC	25AUTOSYNC
Synchronism and energizing check	SECRSYN	SYNC	25
Tap changer control with voltage regulator	OL5ATCC	COLTC	90V
Tap changer position indication and manual control	TPOSYLTC	TPOSM	84T
Transformer data combiner	OLGAPC	OLGAPC	OLGAPC
Petersen coil controller	PASANCR	ANCR	90
High speed bus transfer	HSABTC	I<->O BT	HSBT
Condition monitoring and supervision			
Circuit-breaker condition monitoring	SSCBR	CBCM	52CM
Circuit-breaker condition monitoring - single phase circuit breakers	SPSCBR	CBCMSP	52CMSP
Motor controlled earthing switch and disconnector supervision	ESDCSSWI	ESDCCM	29CM
Hot-spot and insulation ageing rate monitoring for transformers	HSARSPTR	3Ihp>T	26/49HS
Cable Fault Detection	RCFD	CFD	CFD
Trip circuit supervision	TCSSCBR	TCS	TCM
Current circuit supervision	CCSPVC	MCS 3I	CCM
Current circuit supervision for transformers	CTSRCTF	MCS 3I,I2	CCM 3I,I2
Current transformer supervision for high- impedance protection scheme for phase A	HZCCASPVC	MCS I_A	CCM_A
Current transformer supervision for high- impedance protection scheme for phase B	HZCCBSPVC	MCS I_B	CCM_B
Current transformer supervision for high- impedance protection scheme for phase C	HZCCCSPVC	MCS I_C	CCM_C
Fuse failure supervision	SEQSPVC	FUSEF	VCM, 60
Fuse failure voltage difference supervision	FFVDSPVC	FUSEFVD	VCM, 60
Protection communication supervision	PCSITPC	PCS	PCS
Runtime counter for machines and devices	MDSOPT	OPTS	OPTM
Three-phase remanent undervoltage supervision	MSVPR	3U<R	27R
Diesel Generator Monitoring	DGMGAPC	P><,U/f ><	32/40G
Station battery supervision	SPVNZBAT	U><	74B
Measurement			
Three-phase current measurement	CMMXU	3I	IA, IB, IC
Sequence current measurement	CSMSQI	I1, I2, I0	I1, I2, I0

Table continues on the next page

Function	IEC 61850	IEC 60617	ANSI
Residual current measurement	RESCMMXU	Io	IG
Three-phase voltage measurement	VMMXU	3U	VA, VB, VC
Single-phase voltage measurement	VAMMXU	U_A	V_A
Phase voltage measurement	VPHMMXU	3UL	VL
Residual voltage measurement	RESVMMXU	Uo	VG/VN
Sequence voltage measurement	VSMSQI	U1, U2, U0	V1, V2, V0
Three-phase power and energy measurement	PEMMXU	P, E	P, E
Load profile recorder	LDPRLRC	LOADPROF	LOADPROF
Frequency measurement	FMMXU	f	f
Power quality			
Current total demand, harmonic distortion, DC component (TDD, THD, DC) and individual harmonics	CHMHAI	PQM3IH	PQM ITHD,IDC
Voltage total harmonic distortion, DC component (THD, DC) and individual harmonics	VHMHAI	PQM3VH	PQM VTHD,VDC
Voltage variation	PHQVVR	PQMU	PQMV SWE,SAG,INT
Voltage unbalance	VSQVUB	PQUUB	PQMV UB
Traditional LED indication			
LED indication control	LEDPTRC	LEDPTRC	LEDPTRC
Individual virtual LED control	LED	LED	LED
Logging functions			
Disturbance recorder (common functionality)	RDRE	DR	RDRE
Disturbance recorder, analog channels 1...12	A1RADR	A1RADR	A1RADR
Disturbance recorder, analog channels 13...24	A2RADR	A2RADR	A2RADR
Disturbance recorder, binary channels 1...32	B1RBDR	B1RBDR	B1RBDR
Disturbance recorder, binary channels 33...64	B2RBDR	B2RBDR	B2RBDR
Fault recorder	FLTRFRC	FAULTREC	FR
Other functionality			
Parameter setting groups	PROTECTION	PROTECTION	PROTECTION
Time master supervision	GNRLLTMS	TSYNC	TSYNC
Serial port supervision	SERLCCH	SERLCCH	SERLCCH
IEC 61850-1 MMS	MMSLPRT	MMS	MMS
IEC 61850-1 GOOSE	GSELPRT	GSE	GSE
IEC 60870-5-103 protocol	I3CLPRT	I3C	I3C
IEC 60870-5-104 protocol	I5CLPRT	I5C	I5C
DNP3 protocol	DNPLPRT	DNP 3.0	DNP 3.0
Modbus protocol (slave)	MBSLPRT	MBS	MBS
Modbus protocol (master)	MBMLPRT	MBM	MBM
Received Modbus binary value	MMVGAPC	MMV	MMV
Received Modbus 32-bit integer value	MMVI4GAPC	MMVI4	MMVI4
Received Modbus measured value	MMVF4GAPC	MMVF4	MMVF4
OR gate with two inputs	OR	OR	OR
OR gate with six inputs	OR6	OR6	OR6
OR gate with twenty inputs	OR20	OR20	OR20
AND gate with two inputs	AND	AND	AND
AND gate with six inputs	AND6	AND6	AND6
AND gate with twenty inputs	AND20	AND20	AND20

Table continues on the next page

Function	IEC 61850	IEC 60617	ANSI
XOR gate with two inputs	XOR	XOR	XOR
NOT gate	NOT	NOT	NOT
Real maximum value selector	MAX3R	MAX3R	MAX3R
Real minimum value selector	MIN3R	MIN3R	MIN3R
Rising edge detector	R_TRIG	R_TRIG	R_TRIG
Falling edge detector	F_TRIG	F_TRIG	F_TRIG
Real switch selector	SWITCHR	SWITCHR	SWITCHR
Integer 32-bit switch selector	SWITCHI32	SWITCHI32	SWITCHI32
SR flip-flop, volatile	SR	SR	SR
RS flip-flop, volatile	RS	RS	RS
Minimum pulse timer, two channels	TPGAPC	TP	62TP
Minimum pulse timer second resolution, two channels	TPSGAPC	TPS	62TPS
Minimum pulse timer minutes resolution, two channels	TPMGAPC	TPM	62TPM
Pulse counter for energy measurement	PCGAPC	PCGAPC	PCGAPC
Pulse timer, eight channels	PTGAPC	PT	62PT
Time delay off, eight channels	TOFGAPC	TOF	62TOF
Time delay on, eight channel	TONGAPC	TON	62TON
Daily timer	DTMGAPC	DTM	DTM
Calendar function	CALGAPC	CAL	CAL
SR flip-flop, eight channels, nonvolatile	SRGAPC	SR	SR
Boolean value event creation	MVGAPC	MV	MV
Integer value event creation	MVI4GAPC	MVI4	MVI4
Analog value event creation with scaling	SCA4GAPC	SCA4	SCA4
Generic control points	SPCGAPC	SPC	SPCG
Integer control status	INCGAPC	INC	INC
Generic up-down counter	UDFCNT	UDCNT	UDCNT
Local/Remote control	CONTROL	CONTROL	CONTROL
External HMI wake-up	EIHMI	EIHMI	EIHMI
Real addition	ADDR	ADDR	ADDR
Real subtraction	SUBR	SUBR	SUBR
Real multiplication	MULR	MULR	MULR
Real division	DIVR	DIVR	DIVR
Real equal comparator	EQR	EQR	EQR
Real not equal comparator	NER	NER	NER
Real greater than or equal comparator	GER	GER	GER
Real less than or equal comparator	LER	LER	LER
Minimum, maximum and average value calculator	MINMAXAVE12R	MINMAXAVE12R	MINMAXAVE12R
Voltage switch	VMSWI	VSWI	VSWI
Current sum	CMSUM	CSUM	CSUM
Current switch	CMSWI	CMSWI	CMSWI
Phase current preprocessing	ILTCTR	ILTCTR	ILTCTR
Residual current preprocessing	RESTCTR	RESTCTR	RESTCTR
Phase and residual voltage preprocessing	UTVTR	UTVTR	UTVTR
Residual current preprocessing, current measured as voltage	RESUTCTR	Io(U)	Io(U)

Table continues on the next page

Function	IEC 61850	IEC 60617	ANSI
SMV stream receiver (IEC 61850-9-2LE and IEC 61869-9 with a maximum of 24 channel outputs)	SMVRCV	SMVRCV	SMVRCV
SMV stream sender (IEC 61850-9-2 LE)	SMVSENDER	SMVSENDER	SMVSENDER
SMV stream sender (IEC 61869-9)	SMVSENDER61869	SMVSENDER61869	SMVSENDER61869
SMV stream channel quality decoder	SMV_QUALITY	SMV_QUALITY	SMV_QUALITY
GOOSE Control Block Monitoring with LGOS	GOLGOS	GOLGOS	GOLGOS
Redundant Ethernet channel supervision	RCHLCCH	RCHLCCH	RCHLCCH
Ethernet channel supervision	SCHLCCH	SCHLCCH	SCHLCCH
HMI Ethernet channel supervision	HMILCCH	HMILCCH	HMILCCH
Received GOOSE binary information	GOOSERCV_BIN	GOOSERCV_BIN	GOOSERCV_BIN
Received GOOSE double binary information	GOOSERCV_DP	GOOSERCV_DP	GOOSERCV_DP
Received GOOSE measured value information	GOOSERCV_MV	GOOSERCV_MV	GOOSERCV_MV
Received GOOSE 8- bit integer value information	GOOSERCV_INT8	GOOSERCV_INT8	GOOSERCV_INT8
Received GOOSE 32- bit integer value information	GOOSERCV_INT32	GOOSERCV_INT32	GOOSERCV_INT32
Received GOOSE interlocking information	GOOSERCV_INTL	GOOSERCV_INTL	GOOSERCV_INTL
Received GOOSE measured value (phasor) information	GOOSERCV_CMV	GOOSERCV_CMV	GOOSERCV_CMV
Received GOOSE enumerator value information	GOOSERCV_ENUM	GOOSERCV_ENUM	GOOSERCV_ENUM
Bad signal quality	QTY_BAD	QTY_BAD	QTY_BAD
Good signal quality	QTY_GOOD	QTY_GOOD	QTY_GOOD
Received GOOSE Test mode	QTY_GOOSE_TEST	QTY_GOOSE_TEST	QTY_GOOSE_TEST
GOOSE communication quality	QTY_GOOSE_COMM	QTY_GOOSE_COM M	QTY_GOOSE_COM M
GOOSE data health	T_HEALTH	T_HEALTH	T_HEALTH
Fault direction evaluation	T_DIR	T_DIR	T_DIR
Enumerator to Boolean conversion	T_TCMD	T_TCMD	T_TCMD
32-bit integer to binary command conversion	T_TCMD_BIN	T_TCMD_BIN	T_TCMD_BIN
Binary command to 32-bit integer conversion	T_BIN_TCMD	T_BIN_TCMD	T_BIN_TCMD
Switching device status decoder - CLOSE position	T_POS_CL	T_POS_CL	T_POS_CL
Switching device status decoder - OPEN position	T_POS_OP	T_POS_OP	T_POS_OP
Switching device status decoder - OK status	T_POS_OK	T_POS_OK	T_POS_OK
Controllable gate, 8 Channels	GATEGAPC	GATEGAPC	GATEGAPC
Security application	GSAL	GSAL	GSAL
Hotline tag	HLTGAPC	HLTGAPC	HLTGAPC
16 settable 32-bit integer values	SETI32GAPC	SETI32GAPC	SETI32GAPC
16 settable real values	SETRGAPC	SETRGAPC	SETRGAPC
Boolean to integer 32- bit conversion	T_B16_TO_I32	T_B16_TO_I32	T_B16_TO_I32
Integer 8-bit to integer 32-bit conversion	T_I8_TO_I32	T_I8_TO_I32	T_I8_TO_I32
Integer 32-bit to Boolean conversion	T_I32_TO_B16	T_I32_TO_B16	T_I32_TO_B16
Integer 32-bit to real conversion	T_I32_TO_R	T_I32_TO_R	T_I32_TO_R
Real to integer 8-bit conversion	T_R_TO_I8	T_R_TO_I8	T_R_TO_I8
Real to integer 32-bit conversion	T_R_TO_I32	T_R_TO_I32	T_R_TO_I32
Packed phase start status decoder	T_STARTS_ABC	T_STARTS_ABC	T_STARTS_ABC
Packed phase operate status decoder	T_OPRS_ABC	T_OPRS_ABC	T_OPRS_ABC
Constant FALSE	FALSE	FALSE	FALSE
Constant TRUE	TRUE	TRUE	TRUE

36. Contents of application packages

REX640 offers comprehensive base functionality. However, it is possible to further adapt the product to meet special installation needs by including any number of the available optional application packages into a single REX640 relay. For the selected application packages, the functionality can be extended by including the related add-on package. The REX640 connectivity package guides the engineer in optimizing the application configuration and its performance.

Table 292: Application packages

Description	ID
Feeder earth-fault protection extension package	APP1
Feeder fault locator package	APP2
Line distance protection package	APP3
Line differential protection package	APP4
Line differential protection (SMV based) package	APP41
Shunt capacitor protection package	APP5
Interconnection protection package	APP6
Machine protection package	APP7
Power transformer protection package	APP8
Busbar protection package	APP9
OLTC control package	APP10
Generator autosynchronizer package	APP11
Network autosynchronizer package	APP12
Petersen coil control package	APP13
DG-set monitoring package	APP14
HSTD for one stand-by feeder	APP51
HSTD for two stand-by feeders	APP52
HSTD for three equal feeders	APP53
Synchronous add-on for machine protection	ADD1
3 winding add-on for transformer protection	ADD2

Table 293: Base and optional functionality

IEC 61850	Pcs	Base	APP1	APP2	APP3	APP4	APP41	APP5	APP6	APP7	APP8	APP9	APP10	APP11	APP12	APP13	APP14	APP51	APP52	APP53	ADD1	ADD2
Protection																						
DSTPDIS	1				•																	
DSTPLAL	1				•																	
DSOCPSCH	1				•																	
SPDSOCPSCH	1				•																	
CRWPSCH	1				•																	
SPCRWPSCH	1				•																	

Table continues on the next page

IEC 61850	Pcs	Base	APP 1	APP 2	APP 3	APP 4	APP 41	APP 5	APP 6	APP 7	APP 8	APP 9	APP 10	APP 11	APP 12	APP 13	APP 14	APP 51	APP 52	APP 53	ADD 1	ADD 2
RESCPSCH	1				•																	
RCRWPSCH	1				•																	
DSTRPSB	1				•																	
LNPLDF	1					•																
LN2PLDF	1						•															
BSTGAPC	4				•	•																
CVPSOF	2	•																				
PHLPTOC	5	•																				
PHHPTOC	5	•																				
PHIPTOC	5	•																				
PHIPIOC	5	•																				
PHLTPTOC	2	•																				
DPHLPDOC	5	•																				
DPHHPDOC	5	•																				
EFLPTOC	5	•																				
EFHPTOC	5	•																				
EFIPTOC	5	•																				
EFIPIOC	5	•																				
EFPLPTOC	2	•																				
EFPHPTOC	1	•																				
EFPIPTOC	1	•																				
DEFLPDEF	5	•																				
DEFHPDEF	5	•																				
DEFPLPDEF	2	•																				
DEFPHPDEF	1	•																				
DPSRDIR	4								•				•									
DNZSRDIR	2		•																			
EFPADM	3		•																			
MFADPSDE	4		•																			
WPWDE	3		•																			
INTRPTEF	2		•																			
HAEFPTOC	1		•																			

Table continues on the next page

IEC 61850	Pcs	Base	APP 1	APP 2	APP 3	APP 4	APP 41	APP 5	APP 6	APP 7	APP 8	APP 9	APP 10	APP 11	APP 12	APP 13	APP 14	APP 51	APP 52	APP 53	ADD 1	ADD 2
IFPTOC	3		●																			
NSPTOC	3	●																				
PDNSPTOC	1	●																				
ROVPTOV	4	●																				
PHPTUV	5	●																				
PHVPTOV	2								●													
PHPTOV	4	●																				
PSPTOV	4	●																				
PSPTUV	4	●																				
NSPTOV	4	●																				
FRPFRQ	12	●																				
PHPVOC	5	●																				
OEPVPH	2										●										●	
T1PTTR	2	●																				
T2PTTR	1										●										●	
COLPTOC	3							●														
CUBPTOC	3							●														
HCUBPTOC	2							●														
SRCPTOC	1							●														
CNUPTOV	2							●														
CPHPTDV	1							●														
DNSPDOC	2	●																				
LVRTPTUV	3								●													
VVSPPAM	3								●													
DQPTUV	2								●													
DOPPDPR	3								●	●	●											
DUPPDPR	3										●										●	
UZPDIS	3										●										●	
DNZPDIS	3	●																				
UEXPDIS	2																				●	
H3EFPSEF	1																				●	

Table continues on the next page

IEC 61850	Pcs	Base	APP 1	APP 2	APP 3	APP 4	APP 41	APP 5	APP 6	APP 7	APP 8	APP 9	APP 10	APP 11	APP 12	APP 13	APP 14	APP 51	APP 52	APP 53	ADD 1	ADD 2
MREFPTOC	2																				•	
GSLPTOC	1																				•	
RPTTR	1									•												
MHZPDIF	1									•												
OOSRPSB	1				•																•	
MNSPTOC	2									•												
PHPTUC	3	•																				
LOFLPTUC	1									•												
JAMPTOC	2									•												
STTPMSU	1									•												
MSCPMRI	1									•												
PREVPTOC	1									•												
MPTTR	1									•												
MPDIF	1									•												
MPUPF	2								•												•	
TR3PTDF	1																					•
TR2PTDF	1										•											
LREFPNDF	3	•																				
HREFPDIF	3	•																				
HIAPDIF	3									•	•	•										
HIBPDIF	3									•	•	•										
HICPDIF	3									•	•	•										
STBPDIF	2	•																				
CCBRBRF	4	•																				
SPCCBRBRF	1	•																				
CBPDSC	1	•																				
INRPHAR	4	•																				
RINRPHAR	4	•																				
TRPPTRC	6	•																				
SPTRPPTRC	2	•																				
ARCSARC	4	•																				

Table continues on the next page

IEC 61850	Pcs	Base	APP 1	APP 2	APP 3	APP 4	APP 41	APP 5	APP 6	APP 7	APP 8	APP 9	APP 10	APP 11	APP 12	APP 13	APP 14	APP 51	APP 52	APP 53	ADD 1	ADD 2
PHIZ	1		•																			
SCEFRFLO	1			•																		
LSHDPFRQ	10	•																				
LSHDGAPC	1	•																				
MAPGAPC	24	•																				
GAEPVOC	1																				•	
LBRDOB	1	•																				
CEPNDF	2	•																				
CLPGAPC	4	•																				
CDDPTOC	2	•																				
FPHRPHS	2	•																				
Control																						
CBXCBR	4	•																				
CBXCBR	2																	•	•	•		
SCBXCBR	1	•																				
P3SXSWI	6	•																				
DCXSWI	8	•																				
ESXSWI	3	•																				
P3SSXSWI	6	•																				
DCSXSWI	8	•																				
ESSXSWI	3	•																				
ESMGAPC	1									•												
DARREC	2	•																				
SPARREC	1	•																				
ASGCSYN	1													•								
ASNSCSYN	3														•							
ASCGAPC	1	•																				
SECRSYN	4	•																				
OL5ATCC	1												•									
TPOSYLTC	1										•		•									
OLGAPC	5												•									

Table continues on the next page

IEC 61850	Pcs	Base	APP 1	APP 2	APP 3	APP 4	APP 41	APP 5	APP 6	APP 7	APP 8	APP 9	APP 10	APP 11	APP 12	APP 13	APP 14	APP 51	APP 52	APP 53	ADD 1	ADD 2
PASANCR	1															•						
HSABTC	1																	•				
HSABTC	2																		•			
HSABTC	3																			•		
Condition Monitoring and Supervision																						
SSCBR	4	•																				
SPSCBR	1	•																				
ESDCSSWI	11	•																				
HSARSPTR	1										•											
RCFD	3	•																				
TCSSCBR	11	•																				
CCSPVC	5	•																				
CTSRCTF	1										•											
HZCCASPVC	3											•										
HZCCBSPVC	3											•										
HZCCCSPVC	3											•										
SEQSPVC	7	•																				
FFVDSPVC	2	•																				
PCSITPC	2				•	•																
MDSOPT	2	•																				
MSVPR	3	•																				
DGMGAPC	1																•					
SPVNZBAT	1	•																				
Measurement																						
CMMXU	8	•																				
CSMSQI	8	•																				
RESCMMXU	8	•																				
VMMXU	8	•																				
VAMMXU	4	•																				
VPHMMXU	2	•																				
RESVMMXU	8	•																				

Table continues on the next page

IEC 61850	Pcs	Base	APP 1	APP 2	APP 3	APP 4	APP 41	APP 5	APP 6	APP 7	APP 8	APP 9	APP 10	APP 11	APP 12	APP 13	APP 14	APP 51	APP 52	APP 53	ADD 1	ADD 2
VSMSQI	8	●																				
PEMMXU	4	●																				
LDPRLRC	1	●																				
FMMXU	5	●																				
Power Quality																						
CHMHAI	4	●																				
VHMHAI	4	●																				
PHQVVR	4	●																				
VSQVUB	4	●																				
Traditional LED indication																						
LEDPTRC	1	●																				
LED	66	●																				
Logging functions																						
RDRE	1	●																				
A1RADR	1	●																				
A2RADR	1	●																				
B1RBDR	1	●																				
B2RBDR	1	●																				
FLTRFRC	1	●																				
Other functionality																						
PROTECTION	1	●																				
GNRLLTMS	1	●																				
FTPLPRT	1	●																				
HTTPLPRT	1	●																				
HMILDEV	1	●																				
ETHLDEV	2	●																				
SERLCCH	2	●																				
MMSLPRT	1	●																				
GSELPRT	1	●																				
I3CLPRT	2	●																				
I5CLPRT	5	●																				

Table continues on the next page

IEC 61850	Pcs	Base	APP 1	APP 2	APP 3	APP 4	APP 41	APP 5	APP 6	APP 7	APP 8	APP 9	APP 10	APP 11	APP 12	APP 13	APP 14	APP 51	APP 52	APP 53	ADD 1	ADD 2
DNPLPRT	5	●																				
MBSLPRT	5	●																				
MBMLPRT	1	●																				
MMVGAPC	2	●																				
MMVI4GAPC	5	●																				
MMVF4GAPC	10	●																				
OR	400	●																				
OR6	400	●																				
OR20	20	●																				
AND	400	●																				
AND6	400	●																				
AND20	20	●																				
XOR	400	●																				
NOT	400	●																				
MAX3R	20	●																				
MIN3R	20	●																				
R_TRIG	10	●																				
F_TRIG	10	●																				
SWITCHR	30	●																				
SWITCHI32	30	●																				
SR	30	●																				
RS	30	●																				
TPGAPC	4	●																				
TPSGAPC	2	●																				
TPMGAPC	2	●																				
PCGAPC	4	●																				
PTGAPC	10	●																				
TOFGAPC	10	●																				
TONGAPC	10	●																				
DTMGAPC	4	●																				
CALGAPC	4	●																				

Table continues on the next page

IEC 61850	Pcs	Base	APP 1	APP 2	APP 3	APP 4	APP 41	APP 5	APP 6	APP 7	APP 8	APP 9	APP 10	APP 11	APP 12	APP 13	APP 14	APP 51	APP 52	APP 53	ADD 1	ADD 2
SRGAPC	4	●																				
MVGAPC	25	●																				
MVI4GAPC	4	●																				
SCA4GAPC	24	●																				
SPCGAPC	10	●																				
INCGAPC	4	●																				
UDFCNT	12	●																				
CONTROL	1	●																				
EIHMI	1	●																				
ADDR	20	●																				
SUBR	20	●																				
MULR	20	●																				
DIVR	20	●																				
EQR	20	●																				
NER	20	●																				
GER	20	●																				
LER	20	●																				
MINMAX-AVE12R	10	●																				
VMSWI	3	●																				
CMSUM	1	●																				
CMSWI	3	●																				
ILTCTR	8	●																				
RESTCTR	8	●																				
UTVTR	8	●																				
RESUTCTR	1	●																				
SMVRCV	4	●																				
SMVSENDER	1	●																				
SMVSEND-ER61869	1	●																				
SMV_QUALITY	30	●																				
GOLGOS	20	●																				

Table continues on the next page

IEC 61850	Pcs	Base	APP 1	APP 2	APP 3	APP 4	APP 41	APP 5	APP 6	APP 7	APP 8	APP 9	APP 10	APP 11	APP 12	APP 13	APP 14	APP 51	APP 52	APP 53	ADD 1	ADD 2
RCHLCCH	1	●																				
SCHLCCH	5	●																				
HMILCCH	1	●																				
GOOSERCV_BIN	200	●																				
GOOSERCV_DP	100	●																				
GOOSERCV_MV	50	●																				
GOOSERCV_INT8	50	●																				
GOOSERCV_INT32	50	●																				
GOOSERCV_INTL	100	●																				
GOOSERCV_CMV	9	●																				
GOOSERCV_ENUM	100	●																				
QTY_BAD	20	●																				
QTY_GOOD	20	●																				
QTY_GOOSE_COMM	100	●																				
T_HEALTH	100	●																				
T_DIR	150	●																				
T_TCMD	100	●																				
T_TCMD_BIN	100	●																				
T_BIN_TCMD	100	●																				
T_POS_CL	150	●																				
T_POS_OP	150	●																				
T_POS_OK	150	●																				
GATEGAPC	1	●																				
GSAL	1	●																				
HLTGAPC	1	●																				
SETI32GAPC	2	●																				

Table continues on the next page

IEC 61850	Pcs	Base	APP 1	APP 2	APP 3	APP 4	APP 41	APP 5	APP 6	APP 7	APP 8	APP 9	APP 10	APP 11	APP 12	APP 13	APP 14	APP 51	APP 52	APP 53	ADD 1	ADD 2
SETRGAPC	2	•																				
T_B16_TO_I32	20	•																				
T_I8_TO_I32	20	•																				
T_I32_TO_B16	20	•																				
T_I32_TO_R	20	•																				
T_R_TO_I8	20	•																				
T_R_TO_I32	20	•																				
T_STARTS_ABC	10	•																				
T_OPRS_ABC	10	•																				
FALSE	10	•																				
TRUE	10	•																				

37. Document revision history

Document revision/date	Product connectivity level	History
A/2018-12-14	PCL1	First release
B/2019-03-27	PCL1	Content updated
C/2019-08-15	PCL1	Content updated
D/2020-02-20	PCL2	Content updated to correspond to the product connectivity level
E/2020-08-12	PCL2	Content updated
F/2020-12-10	PCL3	Content updated to correspond to the product connectivity level
G/2023-02-06	PCL4	Content updated to correspond to the product connectivity level
H/2023-09-19	PCL4	Content updated to correspond to the product connectivity level
J/2024-09-26	PCL4	Content updated
K/2025-09-19	PCL5	Content updated
L/2026-02-10	PCL5	Content updated

Table continues on the next page

Document revision/date	Product connectivity level	History
M/2026-02-25	PCL6	Content updated to correspond to the product connectivity level
N/2026-05-18	PCL7	Content updated to correspond to the product connectivity level
P/2026-11-09	PCL8	Content updated to correspond to the product connectivity level

ABB Distribution Solutions
Digital Substation Products
P.O.Box 699
FI-65101 VAASA, Finland
Phone: +358 10 22 11

ABB India Ltd,
Digital Substation Products
Maneja Works
Vadodara-390013, India
Phone: +91 265 6724402
Fax: +91 265 6724407

abb.com/mediumvoltage
abb.com/relion
go.abb/digitalsubstations

© Copyright 2026 ABB. All rights reserved.

1MRS759144 P