RELION® PROTECTION AND CONTROL

REX615

Product Guide



Contents

1 Description 3
2 Application packages.... 3
3 Relay hardware....5
4 Local HMI.... 11
5 Application....13
6 Supported ABB solutions....21
7 Control....22
8 Arc flash protection.... 22
9 Power transformer differential protection.... 22
10 Measurements.... 23
11 Power quality....23
12 Fault locator.... 23
13 Disturbance recorder.... 24
14 Event log.... 24
15 Recorded data....25
16 Load profile.... 25
17 Trip circuit supervision....25
18 Self-supervision....26
19 Access control and cyber security.... 26
20 Station communication.... 26
21 Asset monitoring and management....31
22 Protection communication and supervision....31
23 Technical data.... 31
24 Mounting methods.... 146
25 Selection and ordering data....146
26 Product HMI languages....146
27 Modification Sales....146
28 Accessories and ordering data....146
29 Tools.... 148
30 Module diagrams....149
31 Certificates.... 165
32 References.... 165
33 REX615 Functions, codes and symbols.... 167
34 Contents of application packages....176
35 Document revision history.... 186

Disclaimer

The information in this document is subject to change without notice and should not be construed as a commitment by ABB. ABB assumes no responsibility for any errors that may appear in this document.

© Copyright 2026 ABB

All rights reserved.

Trademarks

ABB and Relion are registered trademarks of the ABB Group. All other brand or product names mentioned in this document may be trademarks or registered trademarks of their respective holders.

Conformity

This product complies with following directive and regulations.

Directives of the European parliament and of the council:

- Electromagnetic compatibility (EMC) Directive 2014/30/EU
- Low-voltage Directive 2014/35/EU
- RoHS Directive 2011/65/EU
- RoHS Directive (EU) 2015/863 amending Annex II

UK legislations:

- Electromagnetic Compatibility Regulations 2016
- Electrical Equipment (Safety) Regulations 2016
- The Restriction of the Use of Certain Hazardous Substances in Electrical and Electronic Equipment Regulations 2012

These conformities are the result of tests conducted by the third-party testing in accordance with the product standard EN / BS EN 60255-26 for the EMC directive / regulation, and with the product standards EN / BS EN 60255-1 and EN / BS EN 60255-27 for the low voltage directive / safety regulation.

The product is designed in accordance with the international standards of the IEC 60255 series.

1. Description

REX615 is a freely configurable all-in-one protection and control relay for power generation and distribution applications. A wide application coverage combined with a fully modular and scalable hardware and software ensures maximum flexibility and optimal cost-effectivity throughout the relay life cycle – from tailoring to adapting to changing and new application-specific requirements. REX615 represents the next step for ABB's 615 and 620 series relays in terms of technological innovation, flexibility, cost-effectiveness and standardization. As part of ABB's Relion® protection and control family of relays, REX615 builds on ABB's strong heritage of freely configurable multifunctional relays and many proven protection algorithms.

2. Application packages

REX615 offers basic functionality like measurements, power quality, supervision, control, recorders and logics functionality as base functionality. A relay with base functionality and redundant Ethernet communication module can also act as a merging unit. For protection functionality the relay offers various application packages. It is possible to further adapt the product to meet special installation needs by including any number of the available optional application packages into a single REX615 relay. For the selected application packages, the functionality can be extended by including the related add-on package. The REX615 connectivity package guides the engineer in optimizing the application configuration and its performance.

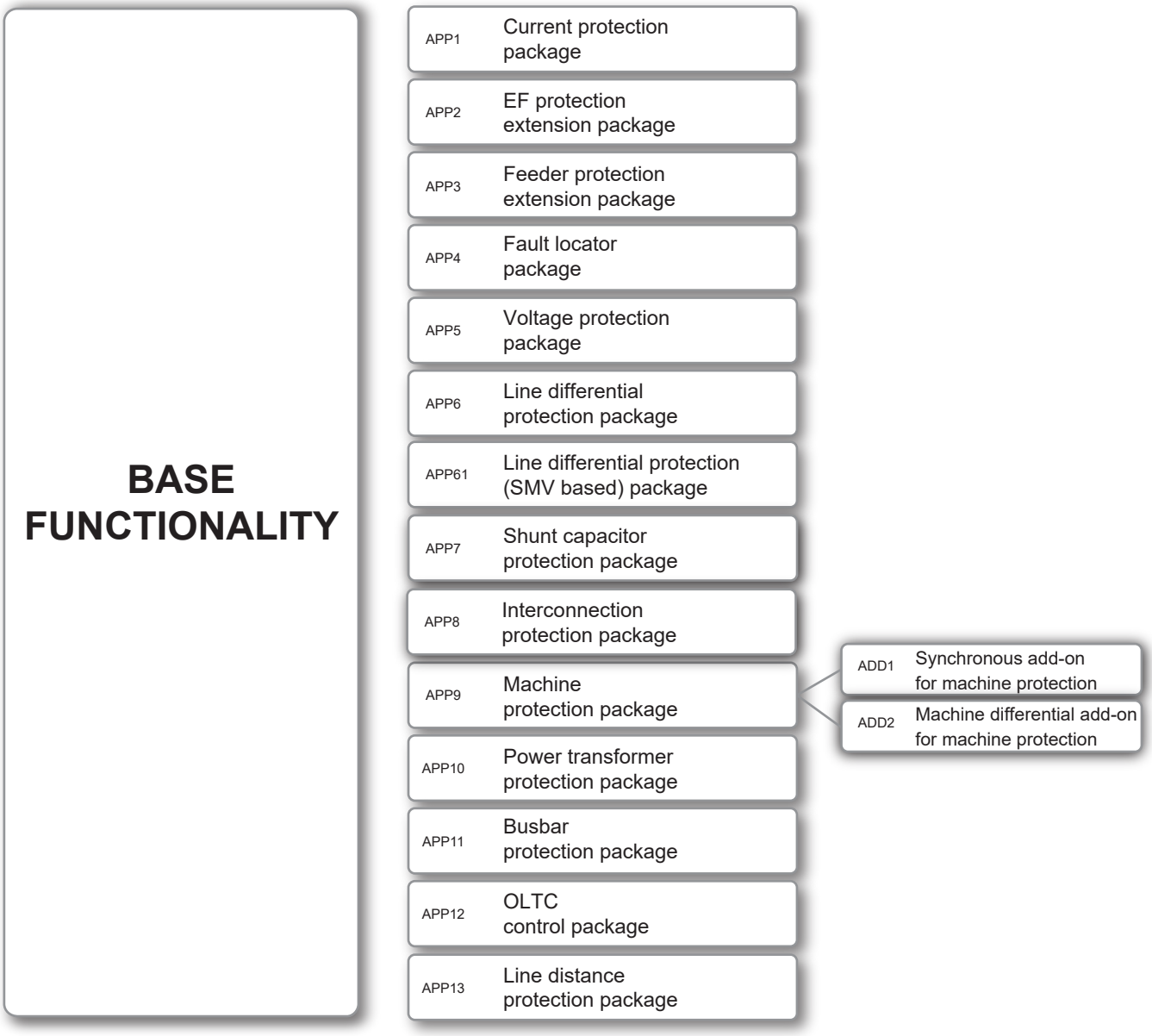

Figure 1: REX615 base and optional functionality

3. Relay hardware

REX615 has modular hardware with a withdrawable plug-in unit design assisting relay installation, testing and maintenance. REX615 offers two different relay size variants: standard and wide. Relay size variant and module content can be selected according to application needs. The relay has mandatory and optional slots. A mandatory slot always contains a module but an optional slot may be empty, depending on the composition variant ordered.

Table 1: Module options common for standard and wide housing

Module	X000	X100	X105[1]	X110	X115[1]	X120	X130
COM1	●						
COM11	●						
COM12	●						
COM13	●						
COM14	●						
COM16	●						
COM17	●						
COM18	●						
COM27	●						
COM31	●						
COM32	●						
COM33	●						
COM34	●						
COM37	●						
COM8	●						
COM9	●						
COM10	●						
COM15	●						
PSM3		●					
PSM4		●					

● = Mandatory to have one of the allocated modules in the slot

[1] Only available with wide housing options.

Table 2: Module slots for standard housing

Module	X000	X100	X110	X120	X130
BIO5			○		
BIO6					○
BIO7			○		
AIM3					●
AIM4				●	
AIM5				●	
AIM6					●
AIM13				●	
AIM15				●	
AIM16				●	
AIM17				●	
AIM18				●	
AIM19				●	
RTD1					○
SIM5					●

● = Mandatory to have at least one analog measurement module in either the slot.

○ = Optional to have one of the allocated modules in the slot.

Table 3: Module slots for wide housing with more I/O options

Module	X000	X100	X105	X110	X115	X120	X130
BIO5			○	○	○		
BIO6							○
BIO7 [2]			○	○	○		
AIM3							●
AIM4						●	
AIM5						●	
AIM6							●
AIM13						●	
AIM15						●	
AIM16						●	

Table continues on the next page

[2] Max. 2 pcs per relay

Module	X000	X100	X105	X110	X115	X120	X130
AIM17						●	
RTD2							○
RTD3			○	○			
SIM5							●

● = Mandatory to have at least one analog measurement module in either the slot.

○ = Optional to have one of the allocated modules in the slot.

Table 4: Module slots for wide housing with more currents and voltages

Module	X000	X100	X105	X110	X115	X120	X130
BIO5			○	○			
BIO7			○	○			
AIM4					●[3]	●	
AIM13						●	
AIM16						●	
AIM17						●	
RTD2							○
RTD3			○				

● = Mandatory to have one of the allocated modules in the slot.

○ = Optional to have one of the allocated modules in the slot.

[3] Always included.

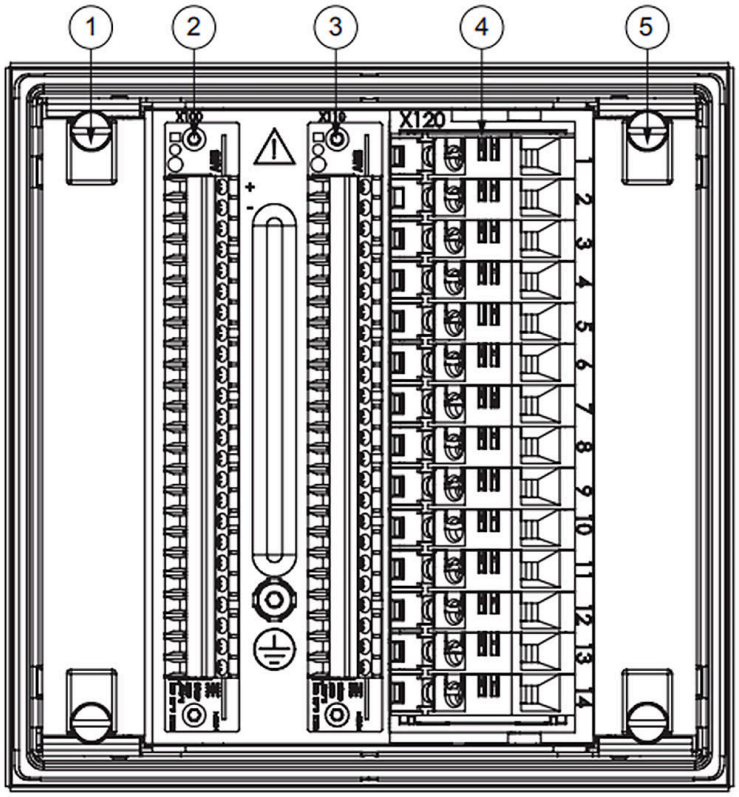

1	X000	4	X120
2	X100	5	X130
3	X110		

Figure 2: Module slot numbering for standard housing

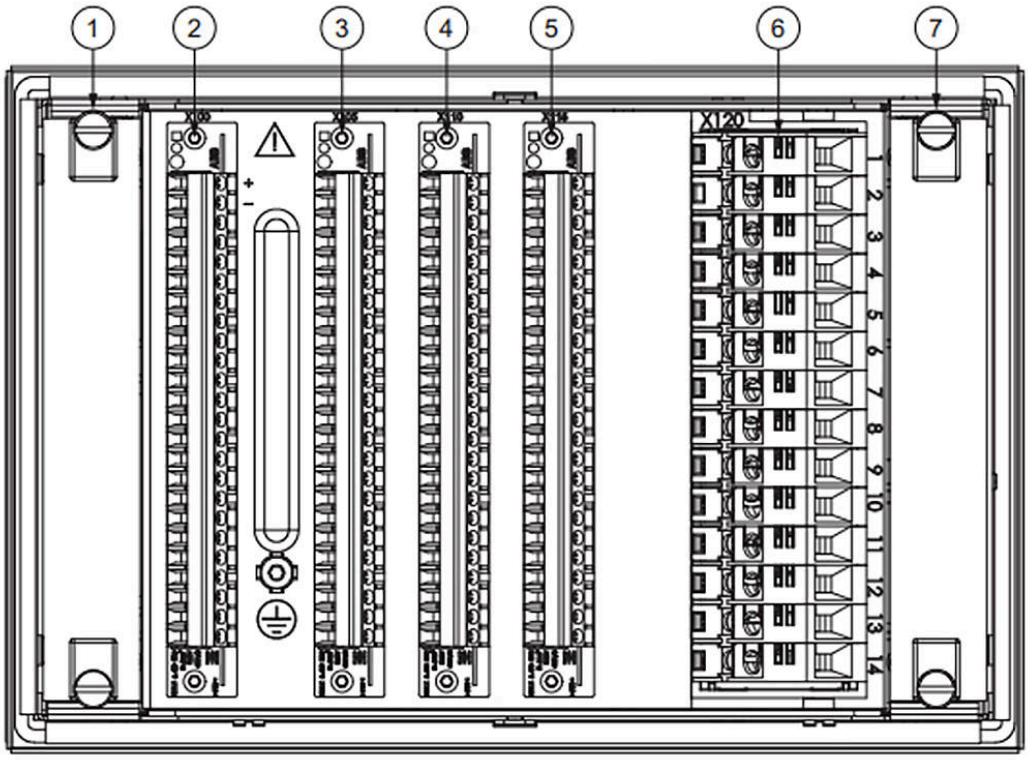

1 X000
2 X100
3 X105
4 X110
5 X115
6 X120
7 X130

Figure 3: Module slot numbering for wide housing

Table 5: Module descriptions

Module	Description
COM1	RJ45
COM11	RJ45 + RS-485/IRIG-B
COM12	LC + RS-485/IRIG-B
COM13	RJ45 + RS-485/IRIG-B + ARC
COM14	LC + RS-485/IRIG-B + ARC
COM16	3RJ45 + RS-485/IRIG-B + ST
COM17	2RJ45 + LC + RS-485/IRIG-B + ST
COM18	3LC + RS-485/IRIG-B + ST
COM27	RJ45 + RS232/485 + RS485/IRIG-B + ST
COM31	3RJ45
COM32	2LC + RJ45 + ST + ARC

Table continues on the next page

Module	Description
COM33	3RJ45 + ST + ARC
COM34	2RJ45 + LC + ST + ARC
COM37	2LC + RJ45
COM8	LD(MM) + 2RJ45 + RS-485/IRIG-B + ST
COM9	LD(MM) + 2LC + RS-485/IRIG-B + ST
COM10	LD(SM) + 2RJ45 + RS-485/IRIG-B + ST
COM15	LD(SM) + 2LC + RS-485/IRIG-B + ST
PSM3	24-60 Vdc; 6BO
PSM4	48-250 Vdc; 100-240 Vac; 6BO
BIO5	8BI + 4BO
BIO6	6BI + 3BO
BIO7	8BI + 3HSO
AIM3	5U + 2RTD + 1mA
AIM4	4I (Io 1/5A) + 3U
AIM5	7I (Io 1/5A)
AIM6	5U + 4BI
AIM13	4I (Io 0.2/1A) + 3U
AIM15	7I (Io 0.2/1A)
AIM16	4I (Io 1/5A) + 4BI
AIM17	4I (Io 0.2/1A) + 4BI
AIM18	4I (Io 1/5A) + Uo + 3BI
AIM19	4I (Io 0.2/1A) + Uo + 3BI
RTD1	6RTD + 2mA (in)
RTD2	2RTD + 1mA (in)+ 3BO
RTD3	6RTD + 2mA (in)
SIM5	3Is + 3Us + 1CT (Io 0.2/1A)

The relay has a nonvolatile memory which does not need any periodical maintenance. The nonvolatile memory stores all events, recordings and logs to a memory which retains data if the relay loses its auxiliary supply.

REX615 relays allow to select many different hardware module combinations utilizing either standard or wide relay variant. This allows users to pick the most suitable hardware content according to application need. *Table 6* presents the capabilities with both standard and wide relay variants.

Table 6: Relay capabilities

Standard	Wide
0-7 CTs + 0-8 VTs	0-8 CTs + 0-8 VTs
0-18 BIs + 6-13 BOs	0-34 BIs + 6-21 BOs
0-6 RTD + 0-2 mA inputs	0-14 RTD + 0-5 mA inputs

4. Local HMI

The relay supports process information and status monitoring from the relay's local HMI via its display and indication/alarm LEDs. The local LHMI also enables control operations for the equipment connected and controlled by the relay, either via display or via manual push buttons available on the local HMI.

LCD offers front-panel user interface functionality with menu navigation and menu views. In addition, the display includes a user-configurable multi-page SLD with a position indication for the associated primary equipment and primary measurements from the process. The SLD can be modified according to user requirements by using Graphical Display Editor in PCM600.

The local HMI also includes 11 programmable LEDs. These LEDs can be configured to show alarms and indications as needed by PCM600 graphical configuration tool. The LEDs include two separately controllable colors, red and green, making one LED able to indicate better the different states of the monitored object.

The relay also includes configurable manual push buttons (4 buttons in standard, 16 buttons in wide), which can be freely configured in the PCM600 graphical configuration tool. These buttons can be configured to control the relay's internal features for example changing setting group, trigger disturbance recordings and changing operation modes for functions or to control relay's external equipment, for example opening or closing the equipment, via relay's binary outputs. These buttons also include a small indication LED for each button. This LED is freely configurable, making it possible to use push button LEDs to indicate button activities or as additional indication/ alarm LEDs in addition to the 11 programmable LEDs.

The local HMI includes a push button (L/R) for the local/remote operation of the relay. When the relay is in the local mode, the relay can be operated only by using the local frontpanel user interface. When the relay is in the remote mode, the relay can execute commands sent remotely. The relay supports the remote selection of local/remote mode via a binary input. This feature facilitates, for example, the use of an external switch at the substation to ensure that all the relays are in the local mode during maintenance work and that the circuit breakers cannot be operated remotely from the network control center.



Figure 4: Standard size LHMI

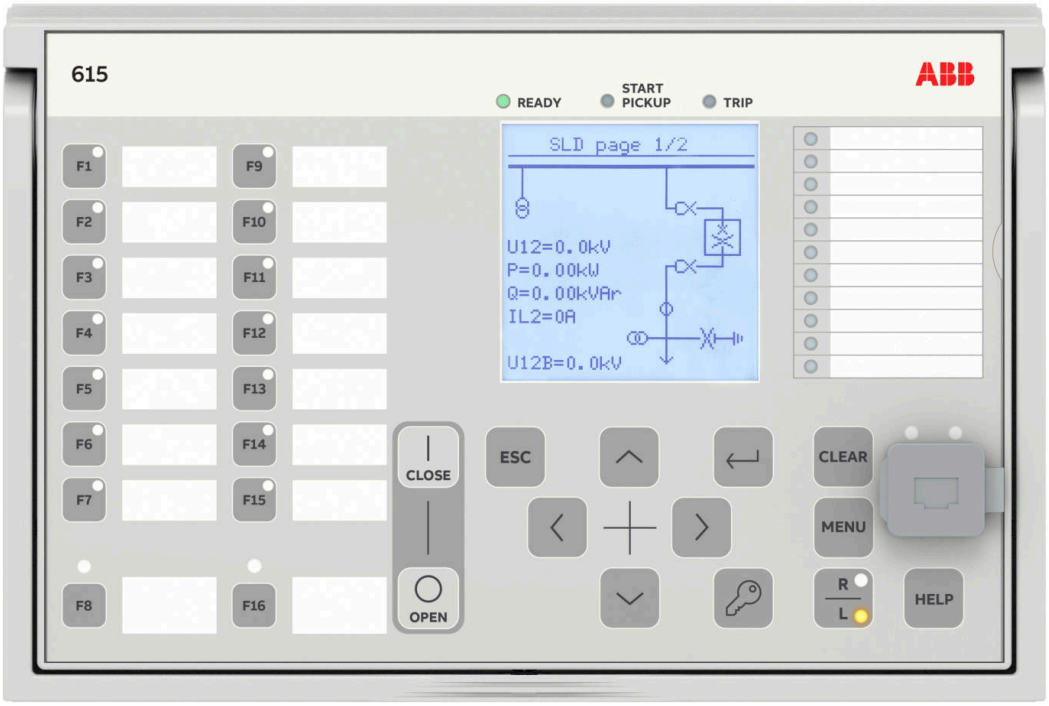

Figure 5: Wide size LHMI

5. Application

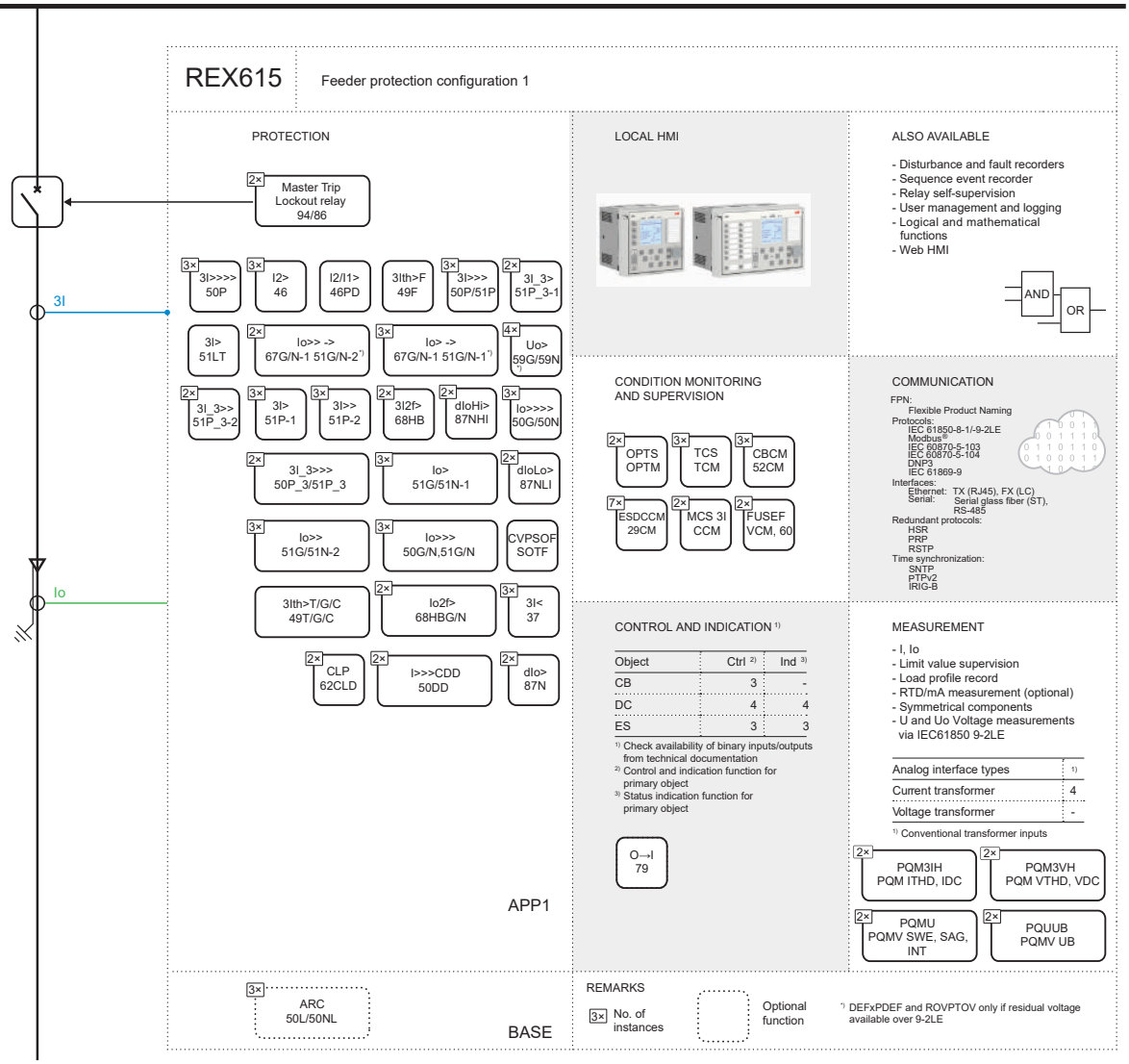

Figure 6: Feeder protection configuration 1

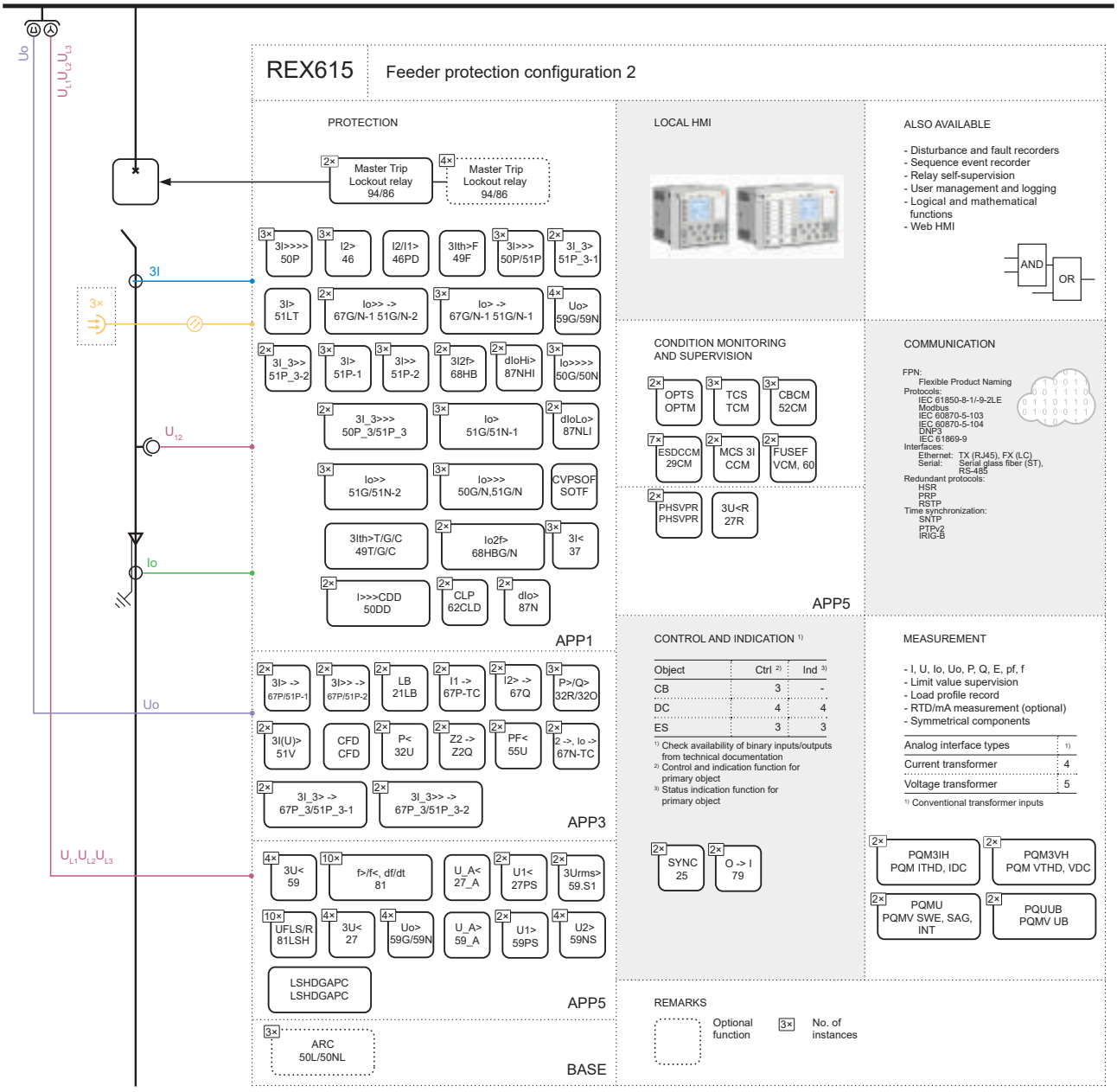

Figure 7: Feeder protection configuration 2

Figure 6 and *Figure 7* present REX615 in a feeder application. The base functionality is enhanced with application packages providing basic current protection (APP1), feeder protection extension (APP3) and voltage protection (APP5). To provide additional protection against earth faults along the feeder, an additional application package APP2 can be selected. Conventional measuring transformers are used in the example cases. Typically used analogue input cards are AIM16 (four current inputs) and AIM6 (five voltage inputs).

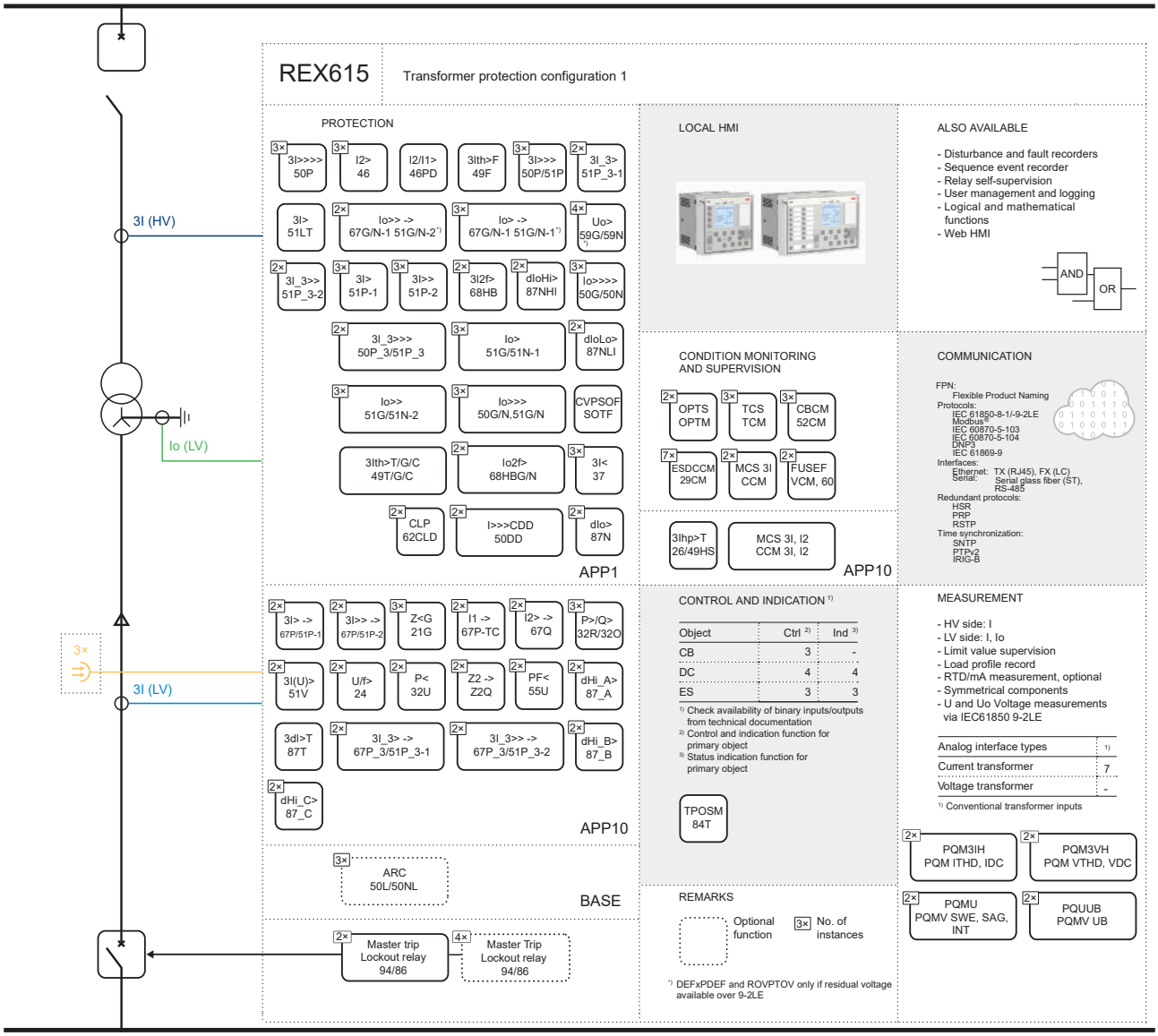

Figure 8: Transformer protection configuration 1

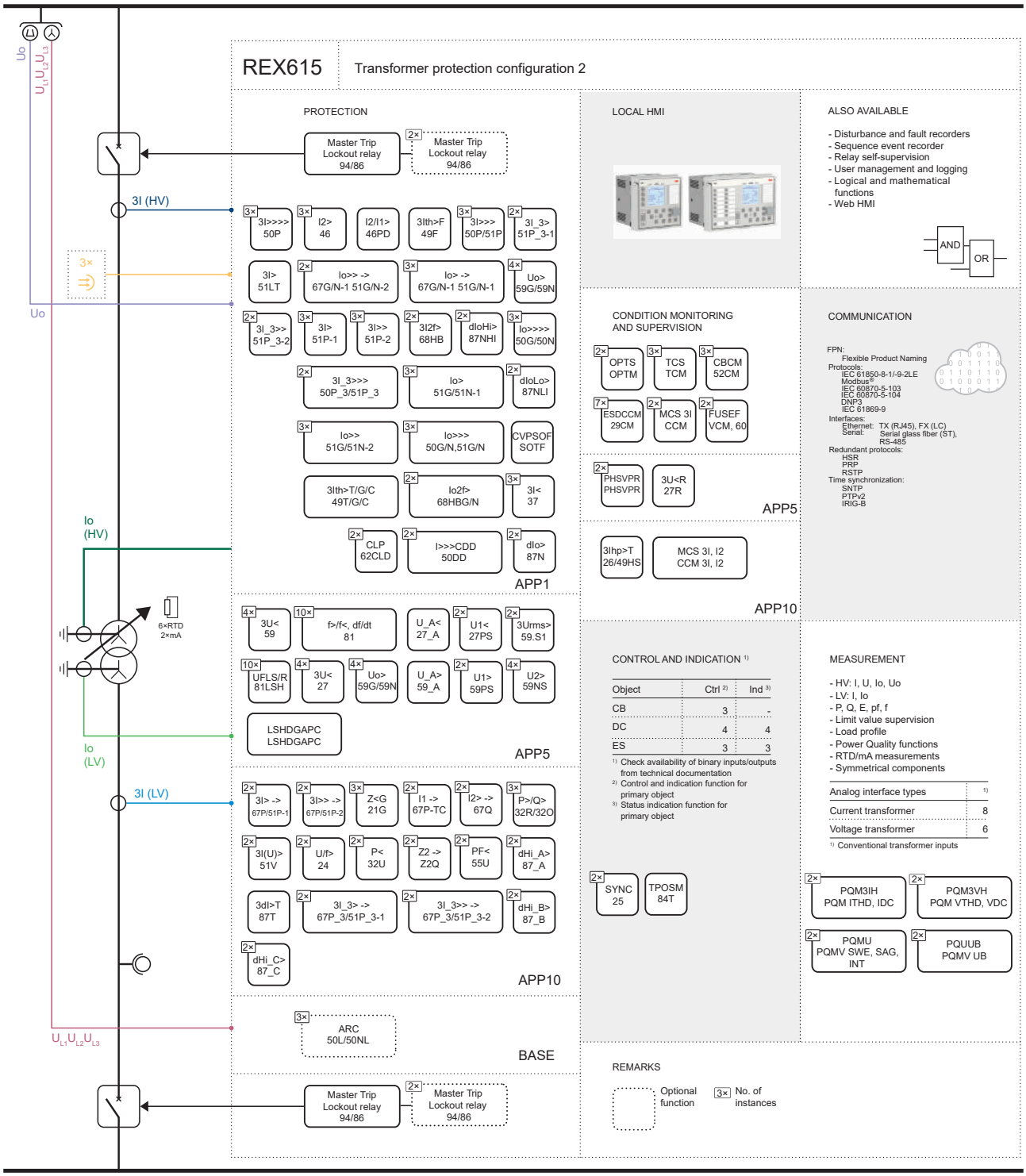

Figure 9: Transformer protection configuration 2

Figure 8 and *Figure 9* present REX615 in a two-winding power transformer application. The base functionality is enhanced with application packages providing basic current protection (APP1) and transformer protection (APP10). In *Figure 9*, REX615 also has voltage protection (APP5) functionality. To provide OLTC control for the transformer, an additional application package APP12 can be selected. The OLTC control function requires information on the tap-changer's actual position. To be able to provide this information, the relay is equipped

with an RTD card which can measure the OLTC position either as a resistance value or as an mA signal. In *Figure 8*, the standard size REX615 is equipped with analogue input card AIM5 (seven current inputs). In *Figure 9*, the wide size REX615 is equipped with two AIM4 analogue input cards. Each AIM4 card provides four current and three voltage inputs.

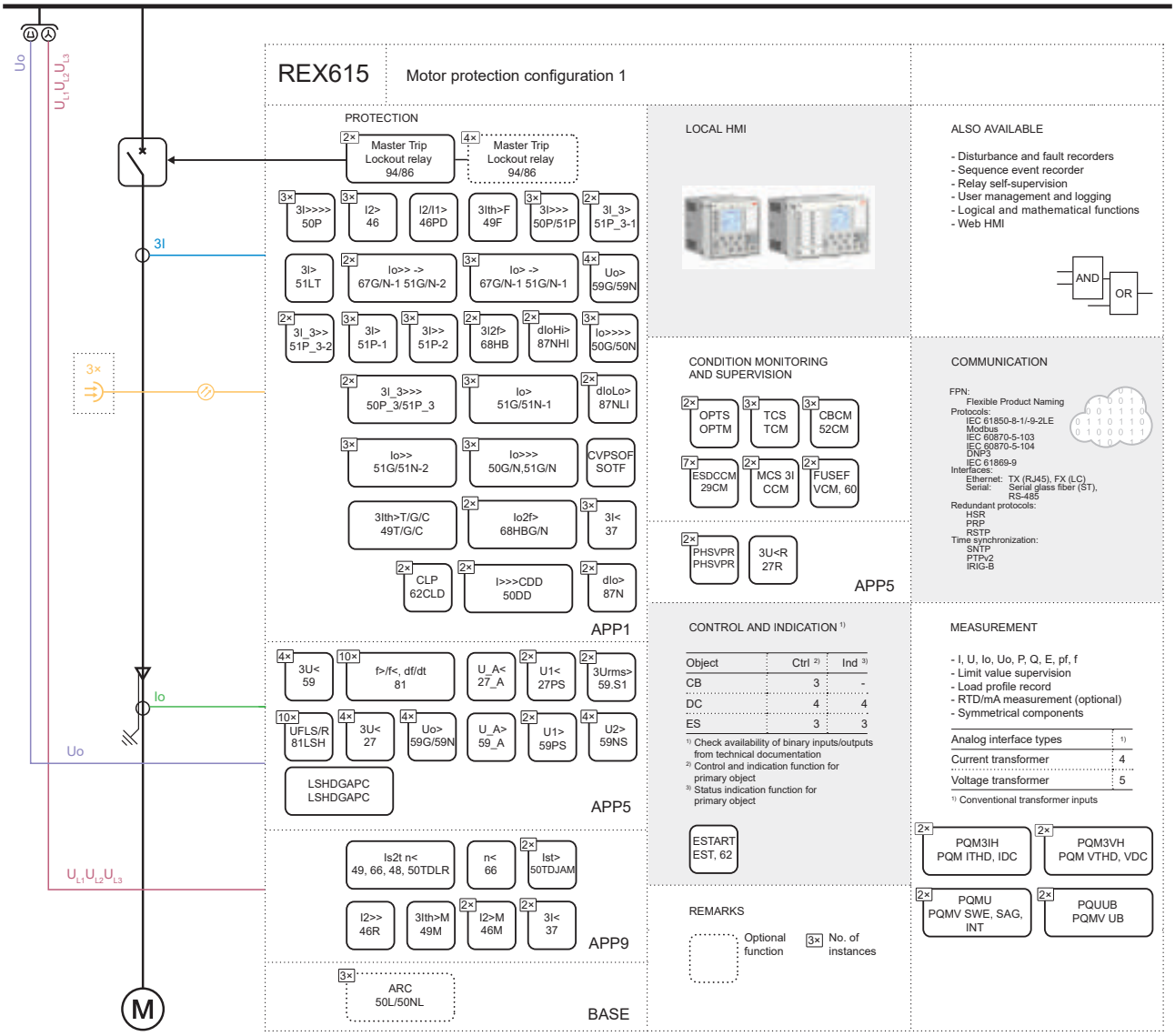

Figure 10: Motor protection configuration 1

Figure 10 presents REX615 in an asynchronous motor application. The base functionality is enhanced with application packages providing basic current protection (APP1), voltage protection (APP5) and machine protection application package (APP9). Conventional measuring transformers are used in the example case. Typically used analogue input cards are AIM16 (four current inputs) and AIM6 (five voltage inputs). To provide differential protection for the asynchronous motor, an additional application package ADD2 can be selected with analogue input card AIM5 (seven current inputs).

REX615 provides also additional package for protecting synchronous motors (ADD1) on top of machine protection (APP9).

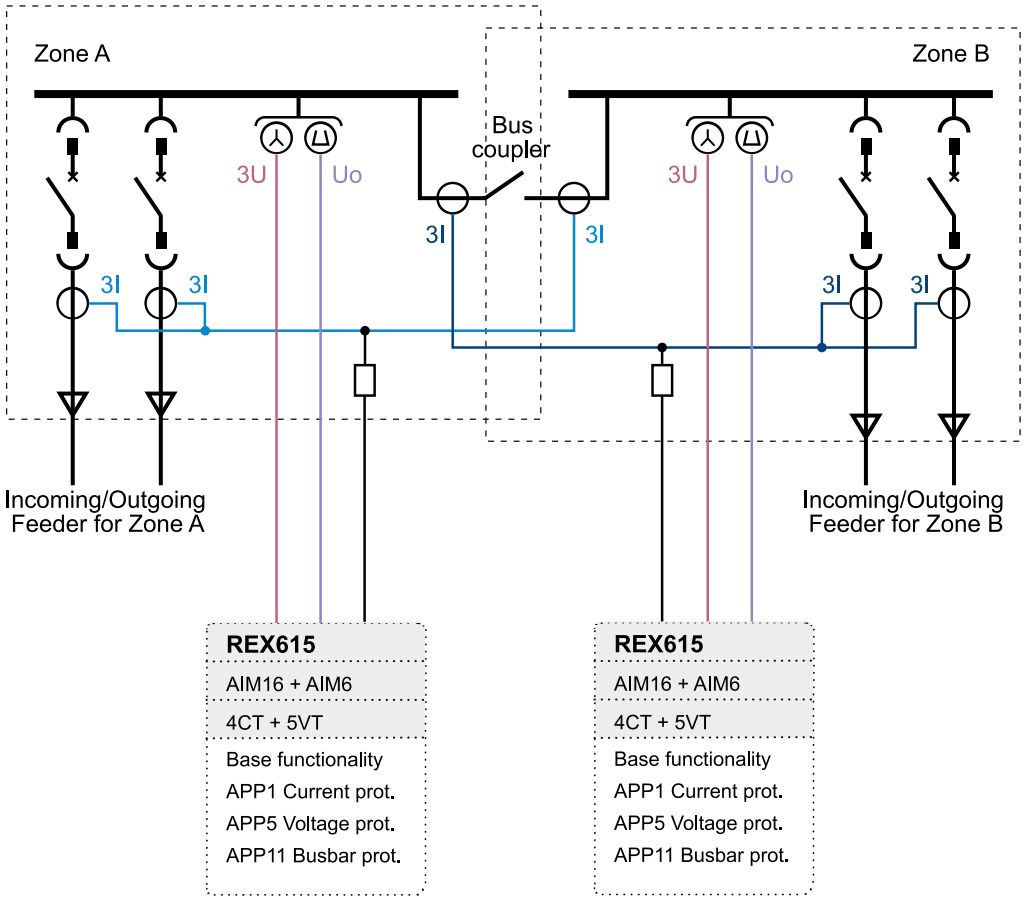

Figure 11: Busbar protection application

Figure 11 presents two REX615 relays in a phase-dedicated high-impedance busbar protection application for a single busbar with two sections. The relay's base functionality is enhanced with the current protection (APP1), voltage protection (APP5) and busbar protection application package (APP11). The two analog input cards (AIM16 and AIM6) in the relay provide four current channels and five voltage channels. In the example, one relay protecting Zone A and another relay protecting Zone B provide selective protection for Bus A and Bus B, respectively. The current transformers' secondary buswires are supervised by dedicated functions within the relay.

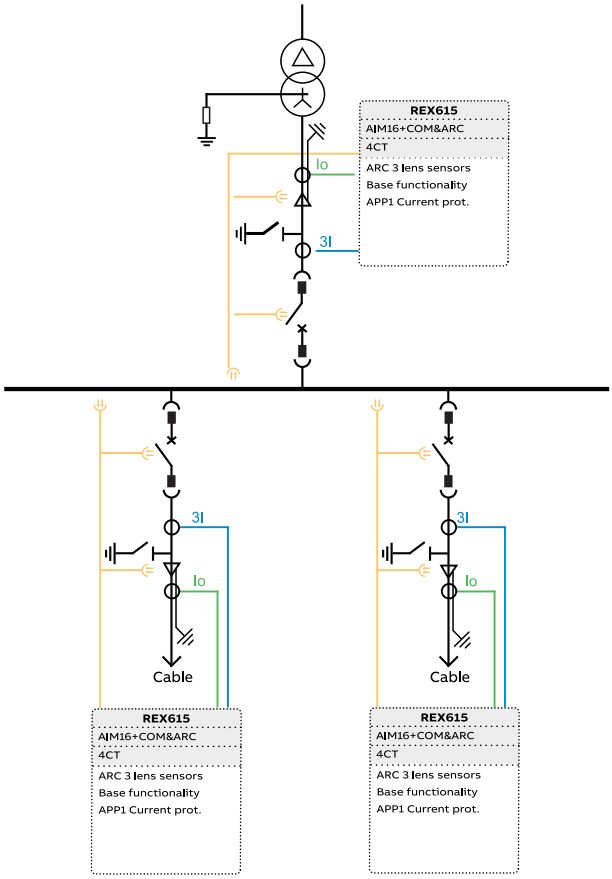

Figure 12: Arc flash protection application

Figure 12 presents an installation-wide arc flash protection scheme for a single busbar switchgear. REX615 protection relays can be selected with a communication card variant also including arc flash sensors. The card supports a maximum of three pieces of lens sensors. By using suitable sensor locations in switchgear cabinet cable end, circuit breaker and bus compartments, we can build up a selective arc flash protection scheme for the complete switchgear. The selective operation of the arc flash protection scheme limits the power outage caused by the arc fault to the smallest possible section of the switchgear. The arc flash protection operation is not dependent on light detection only; it is also supervised by arc fault current measurement. Since the arc flash protection operation should be as fast as possible to minimize impacts, the use of high-speed power outputs (HSO) for tripping circuits is highly recommended.

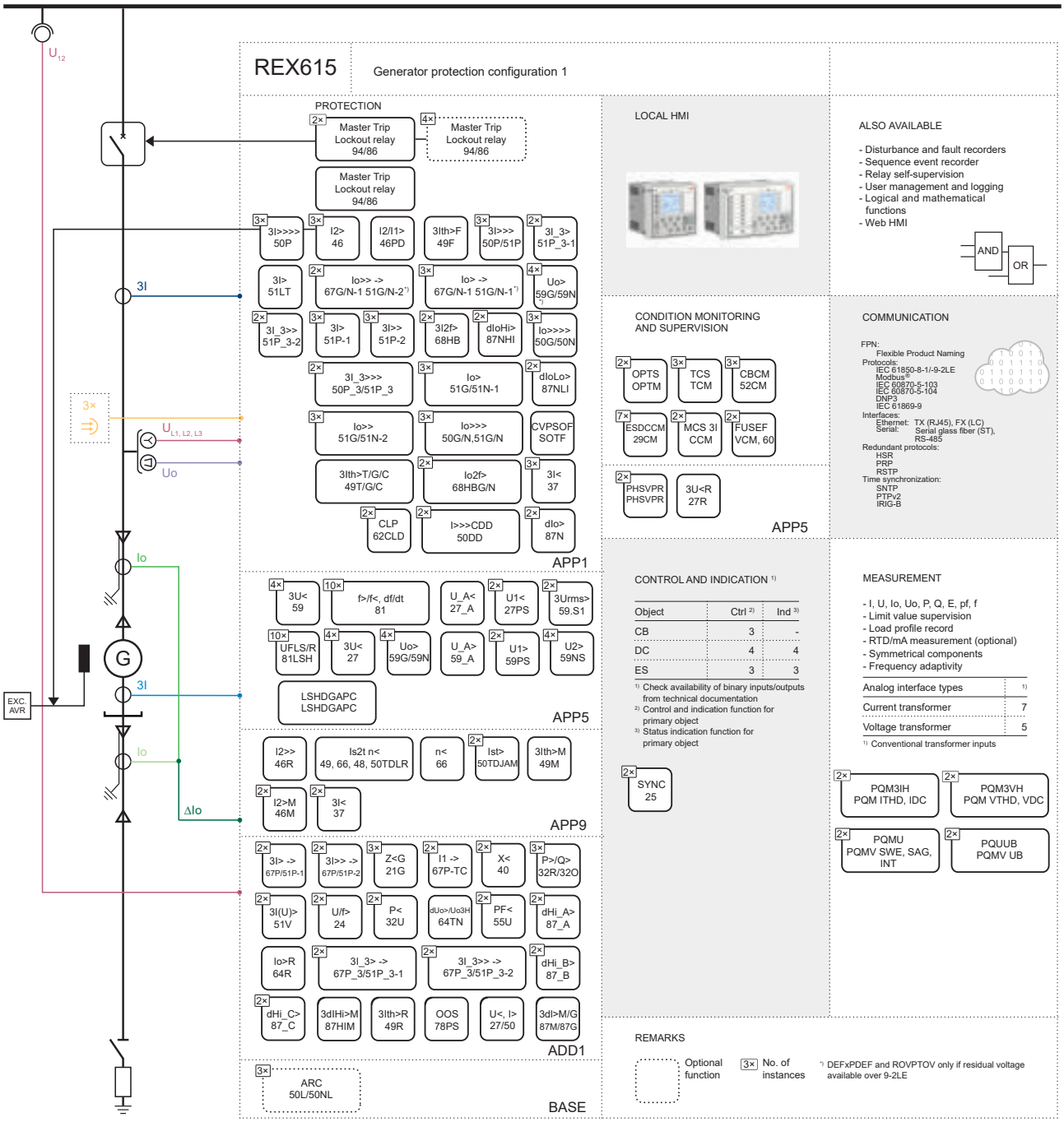

Figure 13: Generator protection configuration 1

Figure 13 presents REX615 in a synchronous generator application. The base functionality is enhanced with application packages providing basic current protection (APP1), voltage protection (APP5) and machine protection (APP9). The synchronous machine add-on package (ADD1) supports the related protection functions for a synchronous generator. Typically used analogue input cards are AIM5 (seven current inputs) and AIM6 (five voltage inputs).

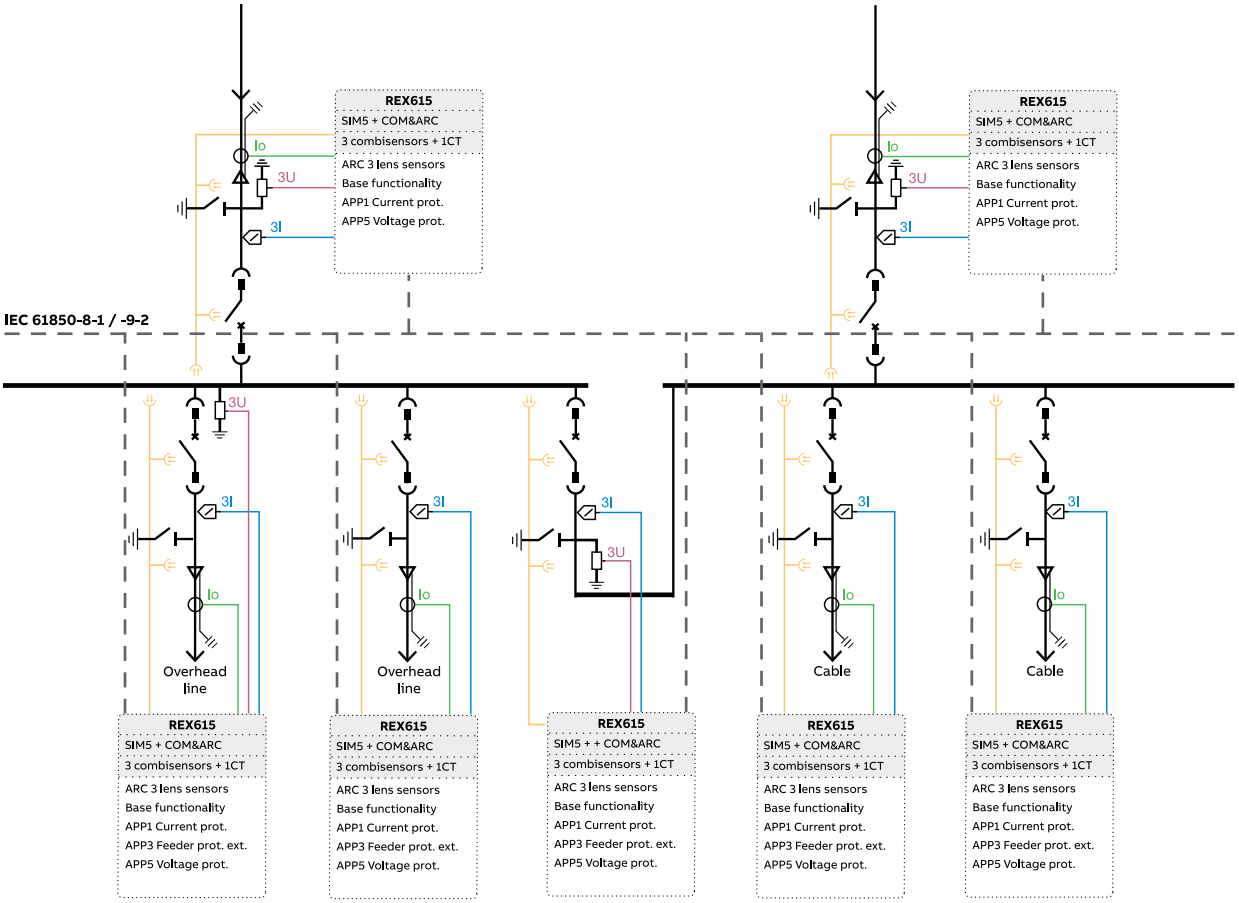

Figure 14: Digital switchgear application

REX615 is perfectly aligned with the needs of digital switchgear. Sensors are used for the local phase current and voltage measurements. Relays with earth-fault protection use core balance current transformer for neutral current measurement. The bus section voltage is measured by one outgoing relay or by the relay in bus-tie cabinet separating bus sections. Both relays send the measured bus voltages to the Ethernet bus as sampled measured values (SMV) according to IEC 61850 9-2 LE or IEC61869-9. Other relays in outgoing feeders receive their bus voltage as sampled measured values via Ethernet bus. Then there is no need for own voltage measurements in those outgoing relays. All interlocking signals between the panels use binary GOOSE messaging according to IEC 61850-8-1. The incoming feeder relays measure the incoming side voltages. When also receiving bus side voltages as sampled measured values, the incomer side relays can perform synchronizing check functionality for circuit breaker closing.

6. Supported ABB solutions

The REX615 protection relay together with the ABB Ability Electrification Monitoring and Control ZEE600 constitutes a genuine IEC 61850 solution for reliable power distribution in utility and industrial power systems. To facilitate the system engineering, ABB's relays are supplied with connectivity packages. The connectivity packages include a compilation of software and relay-specific information, including single-line diagram templates and a full relay data model. The data model includes event and parameter lists. With the connectivity packages, the relays can be readily configured using PCM600 and integrated with the ZEE600.

REX615 offers native support for IEC 61850 Edition 2.1 including binary and analog

horizontal GOOSE messaging. In addition, a process bus enabling sending and receiving of sampled values of analog currents and voltages is supported.

Unlike the traditional hardwired, inter-device signaling, peer-to-peer communication over a switched Ethernet LAN offers an advanced and versatile platform for power system protection. Among the distinctive features of the protection system approach, enabled by the full implementation of the IEC 61850 substation automation standard, are fast communication capability, continuous supervision of the protection and communication system's integrity, and flexible reconfiguration and upgrades. This protection relay series is able to optimally use the interoperability provided by the IEC 61850 Edition 2.1 features.

At substation level, ZEE600 uses the data content of the bay level devices to enhance the substation level functionality.

ZEE600 features a Web browser-based HMI, which provides a customizable graphical display for visualizing single-line mimic diagrams for switchgear bay solutions. Substation devices and processes can also be remotely accessed through the Web HMI, which improves personnel safety.

In addition, ZEE600 can be used as a local data warehouse for the substation's technical documentation and for the network data collected by the devices. The collected network data facilitates extensive reporting and analyzing of network fault situations by using the data historian and event handling features of ZEE600. The historical data can be used for accurate monitoring of process and equipment performance, using calculations based on both real-time and historical values. A better understanding of the process dynamics is achieved by combining time-based process measurements with production and maintenance events.

ZEE600 can also function as a gateway and provide seamless connectivity between the substation devices and network-level control and management systems.

7. Control

REX615 integrates functionality for controlling objects such as circuit breakers, disconnectors, earthing switches, on-load tap changers via the LHMI or by means of remote controls. The relay includes three circuit breaker control blocks. In addition, the relay features four disconnector control blocks and three control blocks for earthing switch. Furthermore, the relay includes four additional disconnector position indication blocks and three earthing switch position indication blocks that can be used with disconnectors and earthing switches that are manually controlled.

The LHMI display supports a single-line diagram with control points and position indication for the relevant primary devices. Interlocking schemes required by the application are configured using Signal Matrix or Application Configuration in PCM600.

REX615 includes two autoreclosing functions, each with up to five programmable autoreclosing shots of desired type and duration. A load-shedding function performs load shedding based on underfrequency and the rate of change of the frequency.

To validate correct closing conditions for a circuit breaker, REX615 contains a synchrocheck function.

8. Arc flash protection

The arc-fault protection sensor interface is available on the optional communication module. The module supports connection up to 3 lens sensors. Fast tripping increases staff safety and limits material damage, therefore it is recommended to use high-speed outputs (HSO) instead of normal power outputs (PO). This typically decreases the total operating time with 4..6 ms compared to the normal power outputs.

9. Power transformer differential protection

The relay offers low-impedance differential protection for two-winding (two restraints) power transformers. The power transformer protection application package includes the protection for a two-winding power transformer. Both low-impedance differential functions feature three-phase multi-slope stabilized stages and an instantaneous stage to provide fast and selective protection

against short circuits, winding interturn faults and bushing flash-overs. A second harmonic restraint with advanced waveform-based blocking ensures stability at transformer energization. The fifth harmonic based blocking and unblocking limits stabilize the protection performance in moderate overexcitation situations. If the tap-changer position information is available, it is possible to further increase the protection sensitivity by compensating the tap-changer position error within the measured differential current.

The power transformer protection application package also includes high-impedance differential functions for a phase-segregated protection scheme. If this scheme is applied, the related current transformers have to be correctly selected and the necessary secondary circuit components, external to the relay, defined.

10. Measurements

The base functionality of the REX615 relay contains a number of basic measurement functions for current, voltage, frequency, symmetrical components of currents and voltages, power, power factor and energy. These measurement functions can be freely connected to the measured secondary quantities available in the relay. The relay can also measure various analog signals via RTD and mA inputs. All these measurements can be used within the relay configuration for additional logics. The measurements are available locally on the HMI and can be accessed remotely via communication. The information is also accessible via Web HMI.

REX615 is provided with frequency adaptability support that can be enabled with a setting parameter. Frequency adaptability enables protection and measurement operation over a wide frequency range of 0.2...1.5 × Fn by using three phase-voltage inputs to track the network frequency.

The relay is also provided with a load profile recorder. The load profile feature stores the selected load measurement data captured periodically (demand interval). The records are available in COMTRADE format.

11. Power quality

In the EN standards, power quality is defined through the characteristics of the supply voltage. Transients, short-duration and long-duration voltage variations and unbalance and waveform distortions are the key characteristics describing power quality. The distortion monitoring functions are used for monitoring the current total demand distortion and the voltage total harmonic distortion.

Power quality monitoring is an essential service that utilities can provide for their industrial and key customers. A monitoring system can provide information about system disturbances and their possible causes. It can also detect problem conditions throughout the system before they cause customer complaints, equipment malfunctions and even equipment damage or failure. Power quality problems are not limited to the utility side of the system. In fact, the majority of power quality problems are localized within customer facilities. Thus, power quality monitoring is not only an effective customer service strategy but also a way to protect a utility's reputation for quality power and service.

The protection relay has the following power quality monitoring functions.

- Voltage variation
- Voltage unbalance
- Current harmonics
- Voltage harmonics

The voltage unbalance and voltage variation functions are used for measuring short-duration voltage variations and monitoring voltage unbalance conditions in power transmission and distribution networks.

The voltage and current harmonics functions provide a method for monitoring the power quality by means of the current waveform distortion and voltage waveform distortion. The functions provide selectable short-term 3- or 60- or 300–second sliding average and a long-term demand for total demand distortion (TDD) and total harmonic distortion (THD). The phase-specific harmonic content is measured for voltages and currents, as well as DC component and fundamental content.

12. Fault locator

The relay features an optional impedance-measuring fault location function suitable for locating short circuits in radial distribution systems. Earth faults can be located in effectively and low-resistance earthed networks, as well as in compensated networks. When the fault current magnitude is at least of the same order of magnitude or higher than the load current, earth faults can also be located in isolated neutral distribution networks. The fault location function identifies the type of the fault and then calculates the distance to the fault point. The calculations provide information on the fault resistance value and accuracy of the estimated distance to the fault point.

13. Disturbance recorder

The relay is provided with a powerful disturbance recorder featuring selectable sampling frequency 64/128 samples per a cycle and up to 12 analog and 64 binary signal channels. The analog channels can be set to record either the waveform or the trend of the currents and voltages measured.

The analog channels can be set to trigger the recording function when the measured value falls below or exceeds the set values. The binary signal channels can be set to start a recording either on the rising or the falling edge of the binary signal or on both.

The binary channels can be set to record external or internal relay signals, for example, the start or trip signals of the relay stages, or external blocking or control signals. The recorded information is stored in a nonvolatile memory in COMTRADE format IEEE Std C37.111-2013 and can be uploaded for subsequent fault analysis.

14. Event log

To collect sequence-of-events information, the relay has a nonvolatile memory capable of storing 1024 events with the associated time stamps. The event log facilitates detailed pre- and post-fault analyses of feeder faults and disturbances. The considerable capacity to process and store data and events in the relay supports the growing information demand of future network configurations.

The sequence-of-events information can be accessed either via the LHMI or remotely via the communication interface of the relay. The information can also be accessed locally or remotely using the Web HMI.

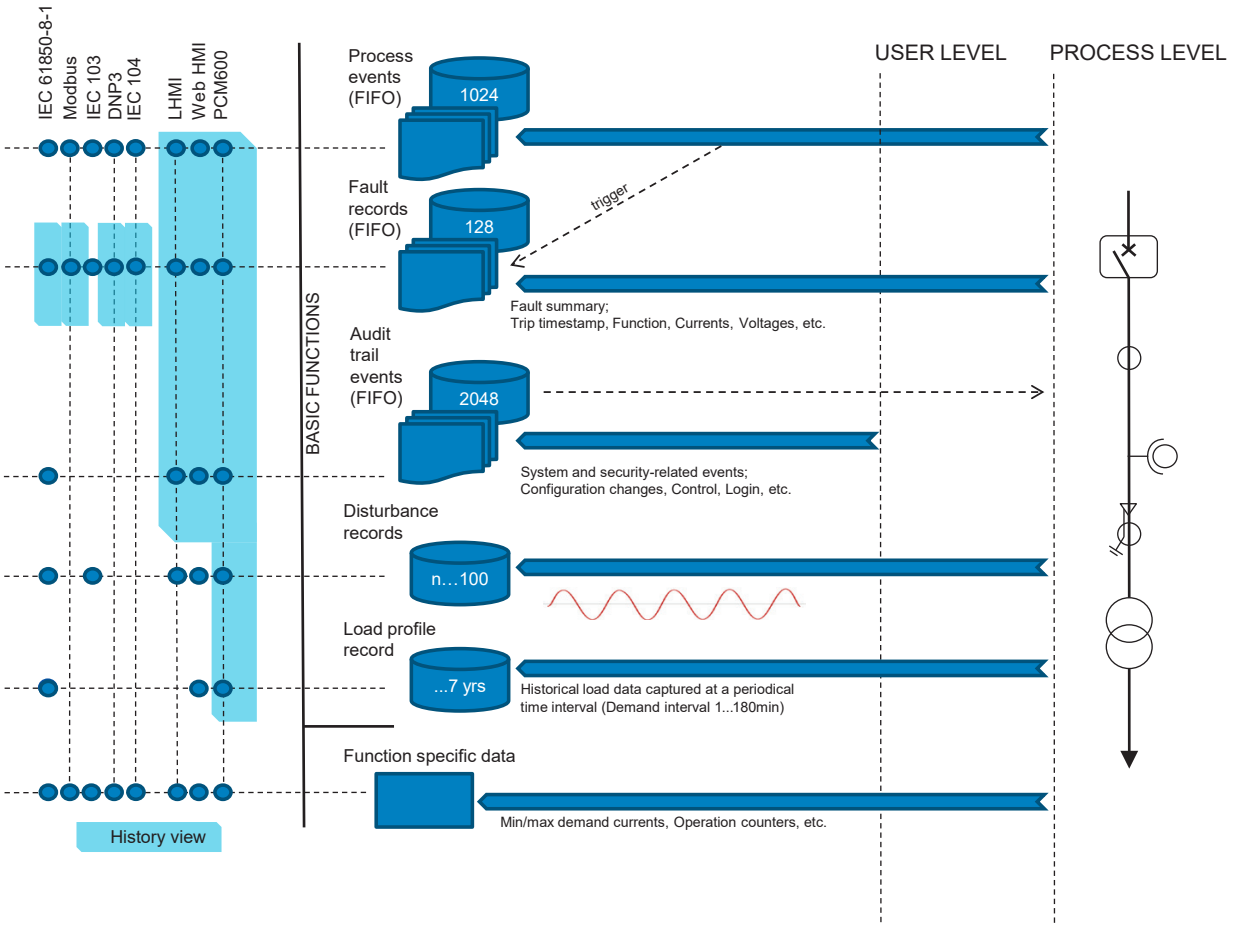

Figure 15: Event recording

15. Recorded data

The relay can store the records of the latest 128 fault events. The records can be used to analyze the power system events. Each record includes, for example, current, voltage and angle values and a time stamp. The fault recording can be triggered by the start or the trip signal of a protection block, or by both. The available measurement modes include DFT, RMS and peak-to-peak. Fault records store relay measurement values when any protection function starts. In addition, the maximum demand current with time stamp is separately recorded. The records are stored in the nonvolatile memory.

16. Load profile

The load profile recorder stores the historical load data captured periodically (demand interval). Up to 12 load quantities can be selected for recording and storing in the nonvolatile memory. The recordable quantities include currents, voltages, power and power factor values. The recording time depends on a settable demand interval parameter and the amount of quantities selected. The quantities' type and amount to be recorded are determined in the application configuration. The recorded quantities are stored in the COMTRADE format IEEE Std C37.111-1999.

17. Trip circuit supervision

The trip circuit supervision continuously monitors the availability and operability of the trip circuit. It provides open-circuit monitoring

both when the circuit breaker is in closed and in open position. It also detects loss of circuit-breaker control voltage.

18. Self-supervision

The relay's built-in self-supervision system continuously monitors the state of the relay hardware and the operation of the relay software. Any fault or malfunction detected is used for alerting the operator.

A permanent relay fault blocks the protection functions to prevent incorrect operation.

19. Access control and cyber security

Cyber security measures are implemented to secure safe operation of the protection and control function following international standard IEC 62443. The relay supports these measures with configuration hardening capabilities, encrypted communication, Ethernet filter and rate limiter, security event logging and user access control. Additionally, the integrity and authenticity of the software a relay runs are checked and verified before and during relay is running. Relay configuration files have integrity and authenticity checks. Secure boot checks relay firmware integrity when relay is started. Relay file system also has integrity checking. When relay firmware is updated, the firmware updates are done securely by the relay tool.

The relay supports role-based user authentication and authorization with individual user accounts as defined in IEC 62351-8. All user activity is logged as security events to an audit trail in a nonvolatile memory and sent as messages to the SysLog server. The nonvolatile memory does not need battery backup or regular component exchange to maintain the memory storage. File transfer and Web HMI use communication encryption protecting the data in transit. Also, the communication link between the relay configuration tool PCM600 and the relay is encrypted. All rear communication ports and optional protocol services can be activated according to the required system setup.

User accounts can be managed by PCM600 or centrally. A central account management is an authentication infrastructure that offers a secure solution for enforcing access control to relays and other systems within a substation. This incorporates management of user accounts, roles and certificates and the distribution of such, a procedure completely transparent to the user. The central server handling user accounts can be, for example, an Active Directory (AD) server such as Windows AD.

The relay supports full Public Key Infrastructure as defined by IEC 62351-9. With this, the user can ensure that the certificates used in secured communication are from a user-approved provider instead of device self-signed certificates. Secure communication is supported for IEC 61850 MMS according to IEC 62351-3 TLS (Transport Layer Security). For protocols DNP3 and IEC 60870-5-104 according to IEC 62351-5.

20. Station communication

Operational information and controls are available through a wide range of communication protocols including IEC 61850 Edition 2.1, IEC 61850-9-2 LE, IEC 60870-5-103, IEC 60870-5-104, Modbus® and DNP3. The Profibus DPV1 communication protocol is supported via the protocol converter SPA-ZC 302. Full communication capabilities, for example, horizontal communication between the relays, are only enabled by IEC 61850.

The relay provides the possibility for a second IP address and a second subnetwork when the communication modules with three Ethernet ports (COM16...18, COM31...34 and COM37) are used. However, only one IP network can be used as the default route. Using two IP addresses, communication networks can be separated based on the dominant user's needs. For example, one IP address can serve the dispatchers and the other one can serve the service engineers' needs.

In addition to the two physical network interfaces, the relay supports up to five VLAN interfaces, which operate as logical communication interfaces within Network1. VLAN interfaces can be used to segment traffic as needed into logically separated Ethernet networks.

Only one interface default route can be configured in the device. To support more complex communication architectures, the

relay also allows configuration of up to 10 additional static routes, enabling traffic to be directed toward specific destination networks in addition to the interface default route.

The IEC 61850 protocol is a core part of the relay as the protection and control application is fully based on standard modelling. The relay supports Edition 2.1 and Edition 1 versions of the standard. With Edition 2.1 support, the relay has the latest functionality modelling for substation applications and the best interoperability for modern substations. The relay supports flexible product naming (FPN) facilitating the mapping of relay's IEC 61850 data model to a customer defined IEC 61850 data model.

The IEC 61850 communication implementation supports monitoring and control functions. Additionally, parameter settings, disturbance recordings and fault records can be accessed using the IEC 61850 protocol. Disturbance recordings are available to any Ethernet-based application in the standard COMTRADE file format. The relay supports simultaneous event reporting to five different clients on the station bus.

The relay can send binary and analog signals to other devices using the IEC 61850-8-1 GOOSE (Generic Object Oriented Substation Event) profile. In addition to IEC 61850-8-1 GOOSE, the relay supports IEC 62351-6 Secure GOOSE for authenticated and integrity-protected peer-to-peer communications. Binary GOOSE messaging can, for example, be used for protection and interlocking-based protection schemes. With this functionality the galvanic interpanel wiring can be replaced with Ethernet communication. The relay meets the GOOSE performance requirements for tripping applications in distribution substations, as defined by the IEC 61850 standard (class P1, <3 ms data exchange between the devices). The relay also supports the sending and receiving of analog values using GOOSE messaging. Analog GOOSE messaging enables easy transfer of analog measurement values over the station bus, thus facilitating, for example, the sending of measurement values between the relays when controlling transformers running in parallel.

The relay also supports IEC 61850 process bus concept by sending and receiving sampled values of currents and voltages. With this functionality long measurement transformer wirings can be reduced and galvanic interpanel wiring can be replaced with Ethernet communication. The analog values are transferred as sampled values using either IEC 61869-9 or IEC 61850-9-2 LE protocol. IEC 61869-9 process bus is according to combined measurement and protection profile with 4,8kHz sampling frequency. REX615 supports publishing of one and subscribing of two sampled value streams. The intended application for sampled values are current-based differential protection functions or sharing the voltage values with the relays that have voltage-based protection or supervision functions. The relay can receive up to two sampled value streams and totally 24 measurements can be connected into the protection relay application when using IEC 61869-9.

Relays with process bus based applications use IEEE 1588 edition 2 for high-accuracy time synchronization.

For redundant Ethernet communication in station bus, the relay offers either two optical or two galvanic Ethernet network interfaces. An optional third port with optical or galvanic Ethernet network interface is also available. The relay also provides an optional fiber-optic port for dedicated protection communication which can be used for up to 20 km distances depending on the selected fiber transceiver. The intended teleprotection applications for this port are line differential protection communication or binary signal transfer. The optional third Ethernet interface provides connectivity for any other Ethernet device to an IEC 61850 station bus inside a switchgear bay, for example connection of a remote I/O. Ethernet network redundancy can be achieved using the high-availability seamless redundancy (HSR) protocol or the parallel redundancy protocol (PRP), or with a self-healing ring using rapid spanning tree protocol RSTP supported by relay. Ethernet redundancy can be applied to the Ethernet-based IEC 61850, IEC 60870-5-104, Modbus and DNP3 protocols.

The IEC 61850 standard specifies network redundancy which improves the system availability for the substation communication. The network redundancy is based on two complementary protocols defined in the IEC 62439-3 standard: PRP and HSR protocols. Both protocols are able to overcome a failure of

a link or switch with a zero switchover time. In both protocols, each network node has two identical Ethernet ports dedicated for one network connection.

The protocols rely on the duplication of all transmitted information and provide a zero switchover time if the links or switches fail, thus fulfilling all the stringent real-time requirements of substation automation.

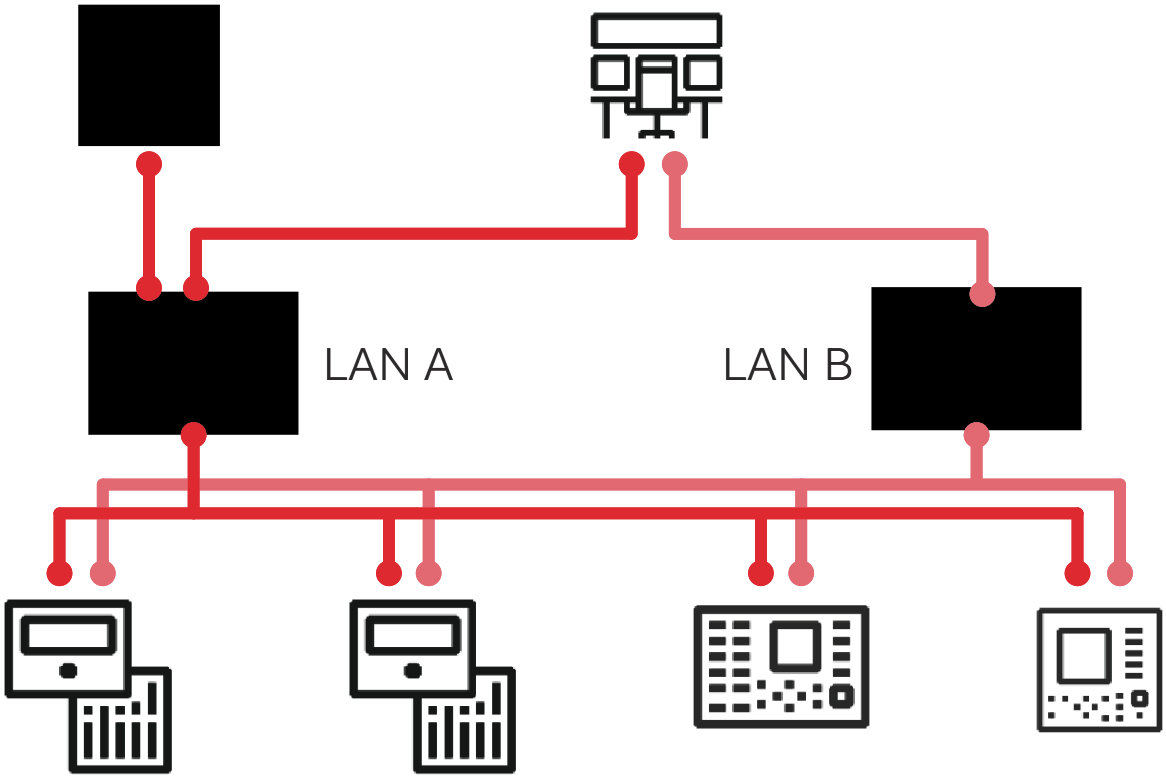

Figure 16: Parallel redundancy protocol (PRP) solution

In PRP, each network node is attached to two independent networks operated in parallel. The networks are completely separated to ensure failure independence and can have different topologies. As the networks operate in parallel, they provide zero-time recovery and continuous checking of redundancy to avoid failures.

HSR applies the PRP principle of parallel operation to a single ring. For each message sent, the node sends two frames, one through each port. Both frames circulate in opposite directions over the ring. Every node forwards the frames it receives from one port to another to reach the next node. When the originating sender node receives the frame it sent, the sender node discards the frame to avoid loops. The HSR ring supports the connection of up to 30 relays. If more than 30 relays are to be connected, it is recommended to split the network into several rings to guarantee the performance for real-time applications.

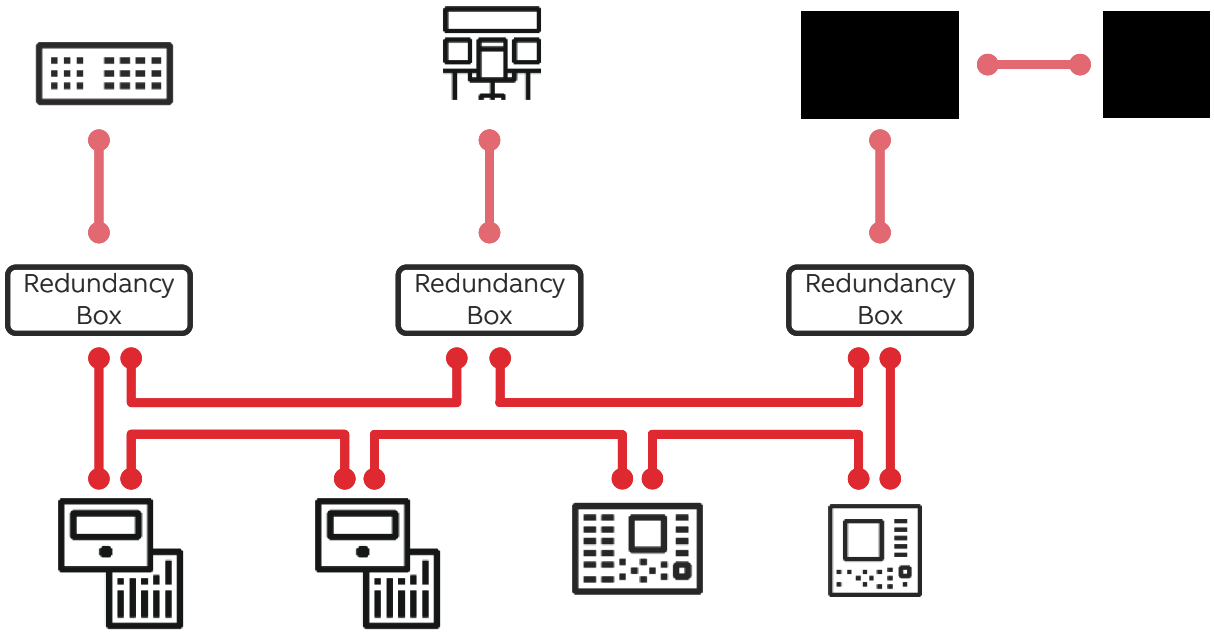

Figure 17: High-availability seamless redundancy (HSR) solution

The relay can be connected to Ethernet-based communication systems in a station bus using the RJ-45 connector (100Base-TX) or the multimode fiber optic LC connector (100Base-FX). A dedicated protection communication port can be selected either with multimode or single mode fiber optic LC connector (100Base-FX). If connection to a serial bus is required, the RS-485 or fiber-optic serial communication ports can be used. An optional serial interface is available for RS-232 communication.

Modbus supports Modbus slave and master Functionality. Modbus slave implementation supports RTU, ASCII and TPC modes. Besides standard Modbus functionality, the relay supports retrieval of time-stamped events, changing the active setting group and uploading of the latest fault records. If a Modbus TCP connection is used, five clients can be connected to the relay simultaneously. Further, Modbus serial and Modbus TCP can be used in parallel, and, if required, both IEC 61850 and Modbus can be run simultaneously. Modbus master implementation supports RTU with serial communication.

The IEC 60870-5-103 implementation supports two parallel serial bus connections to two different masters. Besides basic standard functionality, the relay supports changing of the active setting group and uploading of disturbance recordings in IEC 60870-5-103 format. Further, IEC 60870-5-103 can be used at the same time with the IEC 61850 protocol.

Table 7: Time synchronization methods supported by the relay

Methods	Time-stamping resolution
SNTP (Simple network time protocol) [1]	1 ms
IRIG-B (Inter-Range Instrumentation Group - Time Code Format B) [2]	4 µs
PTPv2 (IEEE 1588) with Power profile (IEEE Std C37.238-2011) and Utility profile (IEC 61850-9-3)	4 µs [3]

DNP3 supports both serial and TCP modes for the connection of up to five masters. Changing the active setting and reading fault records are supported. DNP serial and DNP TCP can be used in parallel. If required, both IEC 61850 and DNP can be run simultaneously.

The relay supports Profibus DPV1 with support of SPA-ZC 302 Profibus adapter. If Profibus is required, the relay must be ordered with Modbus serial options. Modbus implementation includes SPA protocol emulation functionality. This functionality enables connection to SPA-ZC 302.

When the relay uses the RS-485 bus for the serial communication, both two- and four-wire connections are supported. Termination and pull-up/down resistors can be configured with DIP switch on the communication card so that external resistors are not needed.

PTPv2 features:

- PTPv2 Power profile and PTPv2 Utility profile
- Receive (slave): 1-step/2-step
- Transmit (master): 1-step
- Layer 2 mapping
- Peer-to-peer delay calculation and monitoring
- Multicast operation
- Ordinary Clock with Best Master Clock algorithm
- One-step Transparent Clock for Ethernet ring topology
- Slave-only mode

The required accuracy of the grandmaster clock is +/-1 µs to guarantee performance of protection applications. The relay can work as a backup master clock per BMC algorithm if the external primary grandmaster clock is not available for short term.

In addition, the relay supports time synchronization via Modbus, DNP3 and IEC 60870-5-103 serial communication protocols.

Table 8: Supported station communication interfaces and protocols

	Ethernet		Serial	
Interfaces/Protocols	100BASE-TX RJ-45	100BASE-FX LC	RS-232/RS-485	Fiber optic ST
IEC 61850-8-1	●	●	-	-
IEC 61850-9-2 LE/ IEC61869-9	●	●	-	-
MODBUS RTU/ASCII	-	-	●	●
MODBUS TCP/IP	●	●	-	-
DNP3 (serial)	-	-	●	●
DNP3 TCP/IP/UDP	●	●	-	-

Table continues on the next page

[1] Ethernet-based
[2] With special time synchronization wiring
[3] Required especially in process bus applications

	Ethernet		Serial	
Interfaces/Protocols	**100BASE-TX RJ-45**	**100BASE-FX LC**	**RS-232/RS-485**	**Fiber optic ST**
IEC 60870-5-103	-	-	●	●
IEC 60870-5-104	●	●	-	-

● = Supported

21. Asset monitoring and management

SNMP (Simple Network Management Protocol) version 3 provides information for asset management tools. SNMP protocol can be used to monitor equipment information via TCP/IP communication network. When applied to monitor protection & control devices, target is to monitor equipment status, performance and possible issues. Information can be used e.g. for equipment inventory and asset management. Information like relay model, serial number, firmware version, parameter version etc. help to know installed base equipment current state and plan possible updates. Monitoring changes in firmware, parameters and configuration enhances cyber security by monitoring that no unintentional changes are done for relays.

22. Protection communication and supervision

The protection communication between the relays is enabled by means of a dedicated fiber optic communication channel; 1300 nm multimode or single-mode fibers with LC connectors are used. The communication link transfers analog and binary information between line ends for line differential functions (LNPLDF). No external devices, such as GPS clocks, are needed for the line differential protection communication. Additionally, the link can be used to transfer any freely selectable binary data between line ends. In total, 8 binary signals can be transferred between two REX615 protection relays.

The line differential protection (LNPLDF) can be realized between two REX615 relays or between REX615 and RED615 relays or REX615 and REX640 relays. If the line differential protection is to be realized between REX615 and REX640 relays, the module has to be single-mode or multi-mode in both ends. Additionally, if the REX615 is used together with REX640, the REX615 relay phase current measurements should be realized with conventional current transformers that have 1 A as the nominal secondary current or with sensor module (SIM0005).

The protection communication supervision continuously monitors the protection communication link. The line differential protection function can be blocked if severe interference in the communication link, risking the correct operation of the function, is detected. If the interference persists, an alarm signal is triggered indicating permanent failure in the protection communication.

23. Technical data

23.1 Dimensions of the relay

Table 9: Dimensions

Description	Value	
Width (standard case)	Frame	177 mm (6.96 in)
	Case	164 mm (6.46 in)
Width (wide case)	Frame	262 mm (10.31 in)

Table continues on the next page

Description	Value	
	Case	246 mm (9.69 in)
Height	Frame	177 mm (6.97 in) (4U)
	Case	160 mm (6.30 in)
Depth		201 mm (153 mm + 48 mm) 7.91 in (6.02 in + 1.89 in)
Weight (standard case)	Complete protection relay	4.1 kg (9 lb)
	Plug-in unit only	2.1 kg (4.6 lb)
Weight (wide case)	Complete protection relay	max. 5.5 kg (12.1 lb)
	Plug-in unit only	max. 3.0 kg (86 lb)

23.2 Power supply

Table 10: Power supply

Description	PSM4	PSM3
Nominal auxiliary voltage U_n	100, 110, 120, 220, 240 V AC, 50 and 60 Hz	24, 30, 48, 60 V DC
	48, 60, 110, 125, 220, 250 V DC	
Auxiliary voltage variation U_{min} / U max	80 - 110% of U_n (80 - 264 V AC)	80 - 120% of U_n (19.2 - 72 V DC)
	80 - 120% of U_n (38,4 - 300 V DC)	
Maximum interruption time in the auxiliary voltage without resetting the relay [1]	>50 ms at U_n	
Shut down threshold	<38 V AC / DC	<12 V DC
Burden of auxiliary voltage supply under quiescent (P q) / operating condition	REX615 standard: DC <13.0 W (quiescent [2])/<18.0 W (max. [3]) AC <16.0 W (quiescent [2])/<21.0 W (max. [3])	REX615 standard: DC <13.0 W (quiescent [2])/<18.0 W (max. [3])
	REX615 wide: DC <18.0 W (quiescent [2])/<22.5 W (max. [3]) AC <19.0 W (quiescent [2])/<23.0 W (max. [3])	REX615 wide: DC <18.5 W (quiescent [2])/<22.50 W (max. [3])

Table continues on the next page

[1] LHMI LCD backlight and LEDs will be switched off if auxiliary voltage break is longer than 10 milliseconds. If voltage is restored within the 50ms hold-up time, backlight and LEDs are restored to their previous states. This feature intends to improve hold-up time and helps the operator to visu-ally detect short interruptions at auxiliary voltage circuitry.

[2] Condition for quiescent state -The relay is powered at rated auxiliary energizing voltage and energizing quantities are energized below operating values. Communication is active.

[3] Condition for maximum state -The relay is powered at rated auxiliary energizing voltage, and energized with energizing quantities that cause relay to operate and drive at least 50% of all outputs. Communication is active.

Description	PSM4	PSM3
Ripple in the DC auxiliary voltage	Max 15% of the DC value (at frequency of 100 Hz)	
Fuse type	T4A/250 V	
Permissible frequency band	50/60Hz +-10%	

23.3 Energizing inputs

Table 11: Energizing inputs

Description		Value	
Rated frequency		50/60 Hz	
Current inputs	Rated current, I_n	0.2/1 A	1/5 A [4]
	Thermal withstand capability Continuously	4 A	20 A
	Thermal withstand capability For 1 s	100 A	500 A
	Dynamic current withstand Half-wave value	250 A	1250 A
	Input impedance	<100 mΩ	<20 mΩ
Voltage inputs	Rated voltage	60...210 V AC	
	Voltage withstand Continuous	240 V AC	
	Voltage withstand For 10 s	360 V AC	
	Burden at rated voltage	<0.05 VA	

23.4 Energizing Inputs (sensors)

Table 12: Energizing Inputs (SIM0005)

Description		Value
Current sensor input	Rated current voltage	75 mV ... 9000 mV [5]
	Continuous voltage withstand	125 V

Table continues on the next page

[4] Residual current and/or phase current
[5] Equals the current range of 40 … 4000 A with 80A, 3mV/Hz Rogowski

Description		Value
	Input impedance at 50/60Hz	2 MΩ 50 pF
Voltage sensor input	Rated secondary voltage	346 mV…2339 mV [6]
	Continuous voltage withstand	50 V
	Input impedance at 50/60Hz	2 MΩ 50 pF

23.5 Binary inputs

Table 13: Binary inputs

Description	Value
Operating range	±20% of the rated voltage
Rated voltage	24...250 V DC
Current drain	1.6...1.9 mA
Power consumption	31.0...570.0 mW
Threshold voltage	16...176 V DC
Reaction time	<3 ms
Ripple in the DC auxiliary voltage	Max 15 % of the DC value (at frequency of 100 Hz)

Adjust the binary input threshold voltage correctly. The threshold voltage should be set to 70% of the nominal auxiliary voltage. The factory default is 16 V to ensure the binary inputs' operation regardless of the auxiliary voltage used (24, 48, 60, 110, 125, 220 or 250 V DC). However, the default value is not optimal for the higher auxiliary voltages. The binary input threshold voltage should be set as high as possible to prevent any inadvertent activation of the binary inputs due to possible external disturbances. At the same time, the threshold should be set so that the correct operation is not jeopardized in case of undervoltage of the auxiliary voltage. A binary input filter time of 5-35 ms is recommended for the IEC 61000-4-5 surge immunity test.

23.6 RTD/mA inputs

Table 14: RTD/mA inputs

Description		Value	
RTD inputs	Supported RTD sensors	100 Ω platinum	TCR 0.00385 (DIN 43760)
		250 Ω platinum	TCR 0.00385
		100 Ω nickel	TCR 0.00618 (DIN 43760)
		120 Ω nickel	TCR 0.00618
		250 Ω nickel	TCR 0.00618
		10 Ω copper	TCR 0.00427
	Supported resistance range	0...2 kΩ	

Table continues on the next page

[6] Covers 6 kV … 40.5 kV sensors with division ratio of 10 000:1. Secondary voltages 600mV/√3 … 4.05V / √3. Range up to 2 x Rated.

Description		Value	
	Maximum lead resistance (three-wire measurement)	25 Ω per lead	
	Isolation	2 kV (inputs to protective earth)	
	Response time	<4 s	
	RTD/resistance sensing current	Maximum 0.33 mA rms	
	Measurement accuracy	Resistance	Temperature
		± 2.0% or ±1 Ω	±1°C 10 Ω copper: ±2°C
mA inputs	Supported current range	0…20 mA	
	Current input impedance	44 Ω ± 0.1%	
	Measurement accuracy	±0.5% or ±0.01 mA	

23.7 Signal outputs

Table 15: Signal output with high make and carry

Description		Value [7]
Rated voltage		250 V AC/DC
Continuous contact carry		5 A
Mechanical endurance	Unloaded operation	≥10000 cycles
Electrical endurance	Closing operations	≥1000 cycles
	Opening operations	≥1000 cycles
Making limits	Limiting making capacity (inductive)	1000 W at L/R = 40 ms for DC or p.f. = 0.3 for AC
	Make and carry (resistive) for 3.0 s	15 A
	Make and carry (resistive) 0.5 s	30 A
Breaking limits:	Limiting breaking capacity ≤48 V	1 A at L/R = 40 ms for DC or p.f. = 0.3 for AC
	Limiting breaking capacity 110V	0,3 A at L/R = 40 ms for DC or p.f.= 0,3 for AC

Table continues on the next page

[7] X100: SO1 X105: SO1, SO2, when protection relay is equipped with BIO0005 X110: SO1, SO2 when protection relay is equipped with BIO0005 X115: SO1, SO2 when protection relay is equipped with BIO0005. X130: SO1, SO2, SO3 when protection relay is equipped with BIO0006

Description		Value [7]
	Limiting breaking capacity 220V	0,2 A at L/R = 40 ms for DC or p.f.= 0,3 for AC
	Limiting breaking capacity 250V	0,15 A at L/R = 40 ms for DC or p.f.= 0,3 for AC
Minimum contact load		100 mA at 24 V AC/DC

Table 16: Signal outputs and IRF output

Description		Value [8]
Rated voltage		250 V AC/DC
Continuous contact carry		5 A
Mechanical endurance	Unloaded operation	≥10000 cycles
Electrical endurance	Closing operations	≥1000 cycles
	Opening operations	≥1000 cycles
Making limits	Limiting making capacity (inductive)	1000 W at L/R = 40 ms for DC or p.f. = 0.3 for AC
	Make and carry (resistive) for 3.0 s	10 A
	Make and carry (resistive) 0.5 s	15 A
Breaking limits:	Limiting breaking capacity ≤48 V	1 A at L/R = 40 ms for DC or p.f. = 0.3 for AC
	Limiting breaking capacity 110V	0,3 A at L/R = 40 ms for DC or p.f.= 0,3 for AC
	Limiting breaking capacity 220V	0,2 A at L/R = 40 ms for DC or p.f.= 0,3 for AC
	Limiting breaking capacity 250V	0,15 A at L/R = 40 ms for DC or p.f.= 0,3 for AC
Minimum contact load		10 mA at 5 V AC/DC

[7] X100: SO1 X105: SO1, SO2, when protection relay is equipped with BIO0005 X110: SO1, SO2 when protection relay is equipped with BIO0005 X115: SO1, SO2 when protection relay is equipped with BIO0005. X130: SO1, SO2, SO3 when protection relay is equipped with BIO0006

[8] X100: IRF, SO2 X105: SO3, SO4, when protection relay is equipped with BIO0005 X110: SO3, SO4, when protection relay is equipped with BIO0005 X115: SO3, SO4, when protection relay is equipped with BIO0005 X130: SO1, SO2, when protection relay is equipped with RTD0002. X130: SO1, SO2, SO3 when protection relay is equipped with BIO0006

[7] X100: SO1 X105: SO1, SO2, when protection relay is equipped with BIO0005 X110: SO1, SO2 when protection relay is equipped with BIO0005 X115: SO1, SO2 when protection relay is equipped with BIO0005. X130: SO1, SO2, SO3 when protection relay is equipped with BIO0006

23.8 Double-pole power output relays with TCS function

Table 17: Double-pole power output relays with TCS function

Description		Value [9]
Rated voltage		250 V AC/DC
Continuous contact carry		8 A
Mechanical endurance	Unloaded operation	≥10000 cycles
Electrical endurance	Closing operations	≥1000 cycles
	Opening operations	≥1000 cycles
Making limits	Limiting making capacity (inductive)	1000 W at L/R = 40 ms for DC or p.f. = 0.3 for AC
	Make and carry (resistive) for 3.0 s	15 A
	Make and carry (resistive) 0.5 s	30 A
Breaking limits:	Limiting breaking capacity ≤48 V	5 A at L/R = 40 ms for DC or p.f. = 0.3 for AC
	Limiting breaking capacity 110V	3 A at L/R = 40 ms for DC or p.f.= 0,3 for AC
	Limiting breaking capacity 220V	1,2 A at L/R = 40 ms for DC or p.f.= 0,3 for AC
	Limiting breaking capacity 250V	1 A at L/R = 40 ms for DC or p.f.= 0,3 for AC
Minimum contact load		100 mA at 24 V AC/DC
Trip-circuit supervision (TCS):		
• Control voltage range		20...250 V AC/DC
• Current drain through the supervision circuit		~1.5 mA
Minimum voltage over the TCS contact		20 V AC/DC (15...20 V)

[9] X100: PO3 and PO4

23.9 Power outputs

Table 18: Single-pole power output relays

Description		Value[10]
Rated voltage		250 V AC/DC
Continuous contact carry		8 A
Mechanical endurance	Unloaded operation	≥10000 cycles
Electrical endurance	Closing operations	≥1000 cycles
	Opening operations	≥1000 cycles
Making limits	Limiting making capacity (inductive)	1000 W at L/R = 40 ms for DC or p.f. = 0.3 for AC
	Make and carry (resistive) for 3.0 s	15 A
	Make and carry (resistive) 0.5 s	30 A
Breaking limits:	Limiting breaking capacity ≤48 V	5 A at L/R = 40 ms for DC or p.f. = 0.3 for AC
	Limiting breaking capacity 110V	3 A at L/R = 40 ms for DC or p.f.= 0,3 for AC
	Limiting breaking capacity 220V	1,2 A at L/R = 40 ms for DC or p.f.= 0,3 for AC
	Limiting breaking capacity 250V	1 A at L/R = 40 ms for DC or p.f.= 0,3 for AC
Minimum contact load		100 mA at 24 V AC/DC

Table 19: Signal/trip output with high make and carry and with TCS function

Description		Value [11]
Rated voltage		250 V AC/DC
Continuous contact carry		5 A
Mechanical endurance	Unloaded operation	≥10000 cycles
Electrical endurance	Closing operations	≥1000 cycles
	Opening operations	≥1000 cycles

Table continues on the next page

[10] X100: PO1 and PO2
[11] X130: SO3 when protection relay is equipped with RTD0002

Description		Value [11]
Making limits	Limiting making capacity (inductive)	1000 W at L/R = 40 ms for DC or p.f. = 0.3 for AC
	Make and carry (resistive) for 3.0 s	15 A
	Make and carry (resistive) 0.5 s	30 A
Breaking limits:	Limiting breaking capacity ≤48 V	1 A at L/R = 40 ms for DC or p.f. = 0.3 for AC
	Limiting breaking capacity 110V	0,3 A at L/R = 40 ms for DC or p.f.= 0,3 for AC
	Limiting breaking capacity 220V	0,2 A at L/R = 40 ms for DC or p.f.= 0,3 for AC
	Limiting breaking capacity 250V	0,15 A at L/R = 40 ms for DC or p.f.= 0,3 for AC
Minimum contact load		100 mA at 24 V AC/DC

23.10 High-speed output HSO with BIO0007

Table 20: High-speed output HSO with BIO0007

Description		Value[12]
Rated voltage		250 V AC/DC
Continuous contact carry		6 A
Mechanical endurance	Unloaded operation	≥10000 cycles
Electrical endurance	Closing operations	≥1000 cycles
	Opening operations	≥1000 cycles
Making limits	Limiting making capacity (inductive)	1000 W at L/R = 40 ms for DC or p.f. = 0.3 for AC
	Make and carry (resistive) for 3.0 s	15 A
	Make and carry (resistive) 0.5 s	30 A
Breaking limits:	Limiting breaking capacity ≤48 V	5 A at L/R = 40 ms for DC or p.f. = 0.3 for AC

Table continues on the next page

11 X130: SO3 when protection relay is equipped with RTD0002
11 X130: SO3 when protection relay is equipped with RTD0002
12 X105: HSO1, HSO2, HSO3 when protection relay is equipped with BIO0007. X110: HSO1, HSO2, HSO3 when protection relay is equipped with BIO0007.

Description		Value[12]
	Limiting breaking capacity 110V	3 A at L/R = 40 ms for DC or p.f.= 0,3 for AC
	Limiting breaking capacity 220V	1,2 A at L/R = 40 ms for DC or p.f.= 0,3 for AC
	Limiting breaking capacity 250V	1 A at L/R = 40 ms for DC or p.f.= 0,3 for AC
Operate time		<1 ms
Reset		<20 ms, resistive load

23.11 Serial rear interface

Table 21: Serial rear interface

Type	Counter connector
Serial port (X5)	10-pin counter connector Weidmüller BL 3.5/10/180F AU OR BEDR or 9-pin counter connector Weidmüller BL 3.5/9/180F AU OR BEDR [13]
Serial port (X16)	9-pin D-sub connector DE-9
Serial port (X12)	Optical ST-connector

23.12 Ethernet interfaces

Table 22: Ethernet interfaces

Ethernet interface	Protocol	Cable	Data transfer rate
LHMI front port	TCP/IP protocol	Standard Ethernet CAT 5 cable with RJ-45 connector	10 MBits/s
Rear	TCP/IP protocol	Shielded twisted pair CAT 5e cable with RJ-45 connector or fiber optic cable with LC connector	100 MBits/s

Table 23: Maximum processing delay time

SMVSENDER / SMVSENDER61869 internal processing time (us)	50 Hz nominal frequency	60 Hz nominal frequency
Average processing delay time	1800	1520
Maximum processing delay time	2000	1720

[12] X105: HSO1, HSO2, HSO3 when protection relay is equipped with BIO0007. X110: HSO1, HSO2, HSO3 when protection relay is equipped with BIO0007.
[13] Depending on the optional communication module

23.13 Fiber optic communication link

Table 24: Fiber optic communication link

Connector	Fiber type	Wave length	Typical max. length [14]	Permitted path attenuation [15]
LC	MM 62.5/125 or 50/125 µm glass fiber core	1300 nm	2 km	<8 dB
ST	MM 62.5/125 or 50/125 µm glass fiber core	820...900 nm	1 km	<11 dB

23.14 Fiber optic protection communication link available in REX615

Table 25: Fiber optic protection communication link available in REX615

Connector	Fiber type	Wave length	Typical max. length [1]	Permitted path attenuation [2]
LC	MM 62.5/125 or 50/125 µm	1300 nm	2 km	<8 dB
LC	SM 9/125 µm [3]	1300 nm	20 km	<8 dB

23.15 IRIG-B

Table 26: IRIG-B

Description	Value
IRIG time code format	B004, B005 [18]
Isolation	500V 1 min
Modulation	Unmodulated
Logic level	5 V TTL
Current consumption	<1 mA
Power consumption	<20 mW

14 Maximum length depends on the cable attenuation and quality, the amount of splices and connectors in the path.
15 Maximum allowed attenuation caused by connectors and cable together
1 Maximum length depends on the cable attenuation and quality, the amount of splices and connectors in the path.
2 Maximum allowed attenuation caused by connectors and cable altogether
3 Use single-mode fiber with recommended minimum length of 3 m to connect REX615 to the pilot wire modem RPW600.
18 According to the 200-04 IRIG standard

23.16 Lens sensor and optical fiber for arc protection

Table 27: Lens sensor and optical fiber for arc protection

Description	Value
Fiber optic cable including lens	1.5 m, 3.0 m, 5.0 m, up to 50m
Normal service temperature range of the lens	-40...+100°C
Maximum service temperature range of the lens, max 1 h	+140°C
Minimum permissible bending radius of the connection fiber	100 mm

23.17 Degree of protection of the protection relay

Table 28: Degree of protection of the protection relay

Description	Value
Front:	When flush mounted IP 54
Rear (Connector side):	IP 20 (with ring-lug signal connectors IP 00 or IP 10 depending on wiring)
Top and bottom:	IP 30
Sides:	IP 20

23.18 Environmental conditions

Description	Value
Operating temperature range	-25...+55°C (continuous) [20]
Short-time service temperature range	• -40...+85°C (<16 h) [21, 22] • REX615 with LD communication: -40...+70°C (<16 h) [21, 22]
Relative humidity	<= 95%, non-condensing
Atmospheric pressure	86...106 kPa
Altitude	Up to 2000 m
Transport and storage temperature range	-40...+85°C

23.19 Electromagnetic compatibility tests

[20] Continuously max. 50% of binary inputs and output relays are allowed to be simultaneously active.
[21] Degradation in MTBF and HMI performance outside the temperature range of -25...+55 °C
[22] For relays with an LC communication interface the maximum operating temperature is +70 °C

Table 29: Electromagnetic compatibility - Emission tests

Description	Type test value	Reference
Radiated emission	30 MHz to 230 MHz: · 40 dB (µV/m) quasipeak at 10 m 230 MHz to 1 000 MHz: · 47 dB (µV/m) quasipeak at 10 m	IEC 60255-26 CISPR11, class A
	1 GHz to 3 GHz: · 56 dB (µV/m) average at 3 m · 76 dB (µV/m) peak at 3 m 3 GHz to 6 GHz: · 60 dB (µV/m) average at 3 m · 80 dB (µV/m) peak at 3 m	IEC 60255-26 CISPR32, class A
Conducted emission	Power supply ports: 0,15-0,5 MHz · 79 dB(µV) quasi peak · 66 dB(µV) average 0,5 MHz to 30 MHz · 73 dB(µV) quasi peak · 60 dB(µV) average Telecommunication ports: 0,15-0,5 MHz · 97 to 87 dB(µV) quasi peak · 84 to 74 dB(µV) average 0,5 MHz to 30 MHz · 87 dB(µV) quasi peak · 74 dB(µV) average	IEC 60255-26 CISPR32, class A

Table 30: Electromagnetic compatibility - Immunity tests

Description	Type test value	Reference
Electrostatic discharge test	Contact discharge: 8 kV Air discharge: 15 kV	IEC 60255-26 IEC 61000-4-2 IEEE C37.90.3-2001
Radiated radiofrequency electromagnetic field test	f = 80 MHz...6 GHz	IEC 60255-26

Table continues on the next page

Description	Type test value	Reference
	· 10 V/m (rms), AM 80%, 1 kHz f = 80...1000 MHz · 20 V/m (rms), AM 80% 1 kHz, f = 80...1000 MHz · 20 V/m (rms), 1 kHz, duty cycle 50 %	IEC 61000-4-3 IEEE C37.90.2-2004
Electrical fast transient test	4kV	IEC 60255-26 IEC 61000-4-4 IEEE C37.90.1-2012
Surge test	Communication / Shielded cables: · 4 kV, line-to-earth Other ports: · 4 kV, line-to-earth · 2 kV, line-to-line	IEC 60255-26 IEC 61000-4-5
Conducted disturbance induced by radiofrequency fields test	f = 150 kHz...80 MHz, AM 80%, 1 kHz · 10 V (rms)	IEC 60255-26 IEC 61000-4-6
Power frequency (50 Hz) magnetic field test	Continuous: · 300 A/m Short time 1s…3s: · 1000 A/m	IEC 60255-26 IEC 61000-4-8
Pulse magnetic field test	1000 A/m, 8/20 µs	IEC 61000-4-9
Damped oscillatory magnetic field test	100 A/m, 100kHz and 1 MHz, 2s	IEC 61000-4-10
Power frequency immunity test	Binary inputs only: · 300 V rms, common mode · 150 V rms, differential mode	IEC 60255-26 IEC 61000-4-16
Slow damped oscillatory waves test	100 kHz and 1 MHz · 2.5 kV, common mode · 2.5 kV, differential mode	IEC 60255-26 IEC 61000-4-18 IEEE C37.90.1-2012
Fast damped oscillatory waves test	3 MHz, 10 MHz and 30 MHz · 2.5 kV, common mode	IEC 60255-26 IEC 61000-4-18
Voltage dips and short interruptions tests	0% / 50 ms at Un AC, 20 ms at Un DC, criterion A	IEC 60255-26

Table continues on the next page

Description	Type test value	Reference
	0% / 20 ms at Umin variation, criterion A	IEC 61000-4-11
	40% / 200 ms, criterion C	IEC 61000-4-29
	70% / 500 ms, criterion C	
	0% / 5000 ms, criterion C	
Ripple on DC input power port test	15 % of rated DC value	IEC 60255-26
		IEC 61000-4-17
Gradual shutdown/start-up test	Shut-down ramp 60s	IEC 60255-26
	Power off 5 min	
	Start-up ramp 60s	

23.20 Safety-related tests

Table 31: Safety-related tests

Description	Type test value	Reference
Overvoltage category	III	IEC 60255-27
Pollution degree	2	IEC 60255-27
Insulation class	Class I	IEC 60255-27
Leakage current	Evaluated / Tested	IEC 60255-27
Clearance and creepage	Evaluated	IEC 60255-27
Accessible parts test	Tested	IEC 60255-27
IP rating	IP 54, front side	IEC 60255-27
		IEC 60529
	Other faces (not accessible in normal use):	
	IP 30, top and bottom	
	IP 20, sides	
	IP 20, rear side (with ring-lug signal connectors IP 10)	
Dielectric tests	2,2 kV, 50 Hz, 1 min	IEC 60255-27
	1,5 kV, 50 Hz, 1 min, communication Ethernet RJ-45	
	500 V, 50 Hz, 1 min, serial communication and IRIG-B	IEEE Std 802.3
	1 kV, 50 Hz, 1 min, across open contacts [1]	
	820V, 50 Hz, 1 min, sensor inputs of SIM0005	

Table continues on the next page

[1] Not applicable for HSO1, HSO2, HSO3 when protection relay is equipped with BIO0007.

Description	Type test value	Reference
Impulse voltage test	5 kV, 1.2/50 µs, 0.5 J	IEC 60255-27
	2,4 kV, 1.2/50 µs, 0.5 J, communication Ethernet RJ-45	
	1 kV, 1.2/50 µs, 0.5 J, serial communication and IRIG-B	IEEE Std 802.3
	1,5 kV, 1.2/50 µs, 0.5 J, sensor inputs of SIM0005	
Insulation resistance measurements	>100 MΩ, 500 V DC	IEC 60255-27
Protective bonding resistance	<0.1 Ω, 4 A, 60 s	IEC 60255-27
Maximum temperature of parts and materials	Tested	IEC 60255-27
Flammability of insulating materials, components and fire enclosures	Evaluated / Tested	IEC 60255-27
Single-fault condition test	Tested	IEC 60255-27
Reverse polarity and slow ramp test	Tested	IEC 60255-27
Resistance to mechanical stress test	IK 06	IEC 60255-27
Marking durability test	Tested	IEC 60255-27
Thermal short time tests	Tested (see chapter Energizing inputs for test values)	IEC 60255-27
Output relay, make and carry tests	Tested	IEC 60255-27
		IEC 60255-1

23.21 Mechanical tests

Table 32: Mechanical tests

Description	Type test value	Reference
Vibration tests (sinusoidal)	Class 2	IEC 60255-21-1
		IEC 60068-2-6 (test Fc)
Shock and bump test	Class 2	IEC 60255-21-2
		IEC 60068-2-27 (test Ea shock)
		IEC 60068-2-29 (test Eb bump)
Seismic test	Class 2	IEC 60255-21-3

23.22 Environmental tests

Table 33: Environmental tests

Description	Type test value	Reference
Dry heat test	· 96 h at +55°C	IEC 60255-1
	· 16 h at +85°C [5]	IEC 60068-2-2
Dry cold test	· 96 h at -25°C	IEC 60255-1
	· 16 h at -40°C	IEC 60068-2-1
Damp heat cyclic test	6 cycles (12 h + 12 h) at +25…+55°C, humidity 93%...97%	IEC 60255-1
		IEC 60068-2-30
Damp heat steady state	10 days at +40°C, humidity 93%	IEC 60255-1
		IEC 60068-2-78
Change of temperature test	5 cycles (3 h + 3 h) at -25...+55°C	IEC 60255-1
		IEC 60068-2-14
Storage test	· 96 h at -40°C	IEC 60255-1
	· 96 h at +85°C	IEC 60068-2-1
		IEC 60068-2-2

23.23 Applicable standards and regulations

EU CE:

- EMC Directive 2014/30/EU
- Low-voltage directive 2014/35/EU
- RoHS Directive 2011/65/EU
- RoHS Directive 2015/863/EU amending Annex II

- EN 60255-1
- EN 60255-26
- EN 60255-27
- EN 61000-6-2
- EN 61000-6-4

UK UKCA:

- Electromagnetic Compatibility Regulations 2016
- Electrical Equipment (Safety) Regulations 2016
- The Restriction of the Use of Certain Hazardous Substances in Electrical and Electronic Equipment Regulations 2012

Table continues on the next page

[5] For relays with an LC communication interface the maximum operating temperature is +70°C.

- BS EN 60255-1
- BS EN 60255-26
- BS EN 60255-27
- BS EN 61000-6-2
- BS EN 61000-6-4

IEC:

- IEC 60255-1 Edition 2.0 2022
- IEC 60255-26 Edition 4.0 2023
- IEC 60255-27 Edition 3.0 2023
- IEC 61000-6-2
- IEC 61000-6-4
- IEC 61850
- IEC 61869-9

UL-listed (c-UL-us):

- UL 508 & CSA C22.2 No. 14-18 - Industrial Control Equipment
- IEEE C37.90
- IEEE C37.90.1
- IEEE C37.90.2

23.24 Protection functions

23.24.1 Line differential protection with in-zone power transformer (LNPLDF)

Table 34: Line differential protection with in-zone power transformer (LNPLDF)

Characteristics	Value		
Operation accuracy [6]	Depending on the frequency of the measured current: f_n ±2 Hz		
	Low stage	±2.5% of the set value	
	High stage	±2.5% of the set value	
High stage, operate time [7, 8]	Minimum	Typical	Maximum
	25 ms	28 ms	31 ms
Reset time	Typically 40 ms		
Reset ratio	Typically 0.96		
Retardation time	<40 ms		

Table continues on the next page

[6] With the symmetrical communication channel (as when using dedicated fiber optic).
[7] Without additional delay in the communication channel (as when using dedicated fiber optic).
[8] Measured with static power output. When differential current = 2 × *High operate value* and f_n = 50 Hz with galvanic pilot wire link + 5 ms.

Characteristics	Value
Operate time accuracy in definite time mode	±1.0% of the set value or ±20 ms
Operate time accuracy in inverse time mode	±5.0% of the set value or ±20 ms [9]
Suppression of harmonics	RMS: No suppression DFT: -50 dB at f = n × fn, where n = 2, 3, 4, 5,… Peak-to-Peak: No suppression

23.24.2 Line differential protection with in-zone power transformer (LNPLDF) main settings

Table 35: Line differential protection with in-zone power transformer (LNPLDF) main settings

Parameter	Function	Value (Range)	Step
Low operate value	LNPLDF	10...200 % I_r	1
High operate value	LNPLDF	200...4000 % I_r	1
Start value 2.H	LNPLDF	10...50%	1
Time multiplier	LNPLDF	0.05...15.00	0.01
Operating curve type	LNPLDF	1 = ANSI Ext. inv. 3 = ANSI Norm. inv. 5 = ANSI Def. Time 9 = IEC Norm. inv. 10 = IEC Very inv. 12 = IEC Ext. inv. 15 = IEC Def. Time	-
Operate delay time	LNPLDF	45...200000 ms	1
CT ratio correction	LNPLDF	0.200...5.000	0.001

23.24.3 Binary signal transfer (BSTGAPC)

Table 36: Binary signal transfer (BSTGAPC)

Characteristic		Value
Signalling delay	Fiber optic link	<5 ms
	Galvanic pilot wirelink	<10 ms

23.24.4 Sampled measured value based line differential protection with in-zone power transformer (LN2PLDF)

[9] *Low operate value* multiples in the range of 1.5...20

Table 37: Sampled measured value based line differential protection with in-zone power transformer (LN2PLDF)

Characteristics	Value		
Operation accuracy	Depending on the frequency of the measured current: f_n ±2 Hz		
	Low stage	±2.5% of the set value	
	High stage	±2.5% of the set value	
High stage, operate time [1, 2]	Minimum	Typical	Maximum
	17 ms	19 ms	22 ms
Reset time	Typically <40 ms		
Reset ratio	Typically 0.96		
Retardation time	<40 ms		
Operate time accuracy in definite time mode	±1.0% of the set value or ±20 ms		
Operate time accuracy in inverse time mode	±5.0% of the theoretical value or ±20 ms [3]		
Suppression of harmonics	RMS: No suppression DFT: -50 dB at f = n × fn, where n = 2, 3, 4, 5,… Peak-to-Peak: No suppression		

23.24.5 Sampled measured value based line differential protection with in-zone power transformer (LN2PLDF) main settings

Table 38: Sampled measured value based line differential protection with in-zone power transformer (LN2PLDF) main settings

Parameter	Function	Value (Range)	Step
Low operate value	LN2PLDF	10...200 % I_r	1
High operate value	LN2PLDF	200...4000 % I_r	1
Start value 2.H	LN2PLDF	10...50%	1
Time multiplier	LN2PLDF	0.05...15.00	0.01

Table continues on the next page

[1] With default values of SV Delay and RSV-delay
[2] Measured with static power output. When differential current = 2 × *High operate value* and f_n = 50 Hz
[3] *Low operate value* multiples in the range of 1.5...20

Parameter	Function	Value (Range)	Step
Operating curve type	LN2PLDF	1=ANSI Ext. inv. 3=ANSI Norm. inv. 5=ANSI Def. Time 9=IEC Norm. inv. 10=IEC Very inv. 12=IEC Ext. inv. 15=IEC Def. Time	-
Operate delay time	LN2PLDF	45...200000 ms	1
CT ratio correction	LN2PLDF	0.200...5.000	0.001

23.24.6 Switch-onto-fault protection (CVPSOF)

Table 39: Switch-onto-fault protection (CVPSOF)

Characteristic	Value
Operation accuracy	Depending on the frequency of the voltage measured: f_n ±2Hz Current: ±1.5% of the set value or ±0.002 × I_n Voltage: ±1.5% of the set value or ±0.002 × U_n
Operate time accuracy	±1.0% of the set value or ±20 ms
Suppression of harmonics	DFT: -50 dB at f = n × f_n, where n = 2, 3, 4, 5,...

23.24.7 Switch-onto-fault protection (CVPSOF) main settings

Table 40: Switch-onto-fault protection (CVPSOF) main settings

Parameter	Function	Value (Range)	Step
SOTF reset time	CVPSOF	0...60000 ms	10

23.24.8 Three-phase non-directional overcurrent protection (PHxPTOC)

Table 41: Three-phase non-directional overcurrent protection (PHxPTOC)

Characteristic		Value
Operation accuracy		Depending on the frequency of the measured current: f_n ±2 Hz
	PHLPTOC	±1.5% of the set value or ±0.002 × I_n

Table continues on the next page

Characteristic		Value		
	PHHPTOC and PHIPTOC	±1.5% of set value or ±0.002 × I_n (at currents in the range of 0.1…10 × I_n) ±5.0% of the set value (at currents in the range of 10…40 × I_n)		
Start time [10, 11]		Minimum	Typical	Maximum
	PHIPTOC: I_{Fault} = 2 × set *Start value* I_{Fault} = 10 × set *Start value*	13 ms 13 ms	17 ms 15 ms	22 ms 18 ms
	PHHPTOC and PHLPTOC: I_{Fault} = 2 × set *Start value*	23 ms	26 ms	29 ms
Reset time		Typically <40 ms		
Reset ratio		Typically 0.96		
Retardation time [12]		<30 ms [13] <35 ms [14]		
Operate time accuracy in definite time mode		±1.0% of the set value or ±20 ms		
Operate time accuracy in inverse time mode		±5.0% of the theoretical value or ±20 ms [15]		
Suppression of harmonics		RMS: No suppression DFT: -50 dB at f = n × f_n, where n = 2, 3, 4, 5,… Peak-to-Peak: No suppression P-to-P+backup: No suppression		

23.24.9 Three-phase non-directional overcurrent protection (PHxPTOC) main settings

Table 42: Three-phase non-directional overcurrent protection (PHxPTOC) main settings

Parameter	Function	Value (Range)	Step
Start value	PHLPTOC	0.05…10.00 × I_n	0.01
	PHHPTOC and PHIPTOC	0.10...40.00 × I_n	0.01
Time multiplier	PHLPTOC and PHHPTOC	0.025...15.000	0.005
Operate delay time	PHLPTOC and PHHPTOC	40...300000 ms	10

Table continues on the next page

10 Measurement mode = default (depends on stage), current before fault = 0.0 × I_n, f_n = 50 Hz, fault current in one phase with nominal frequency injected from random phase angle, results based on statistical distribution of 1000 measurements.
11 Includes the delay of the signal output contact (SO).
12 IFault ≤ 2 × set *Start value*
13 *Measurement mode* "DFT" or "RMS"
14 *Measurement mode* "Pk-to-Pk" or "Pk-to-Pk 0+ backup"
15 *Maximum Start value* = 2.5 × I_n, *Start value* multiples in the range of 1.5...20.

Parameter	Function	Value (Range)	Step
	PHIPTOC	20...300000 ms	10
Operating curve type [16]	PHLPTOC	Definite or inverse time Curve type: 1, 2, 3, 4, 5, 6, 7, 8, 9, 10, 11, 12, 13, 14, 15, 17, 18, 19, 20	
	PHHPTOC	Definite or inverse time Curve type: 1, 3, 5, 9, 10, 12, 15, 17	
	PHIPTOC	Definite time	

23.24.10 Three-independent-phase non-directional overcurrent protection (PH3xPTOC)

Table 43: Three-independent-phase non-directional overcurrent protection (PH3xPTOC)

Characteristic		Value		
Operation accuracy		Depending on the frequency of the measured current: f_n ±2 Hz		
	PH3LPTOC	±1.5% of the set value or ±0.002 × I_n		
	PH3HPTOC and PH3IPTOC	±1.5% of set value or ±0.002 × I_n (at currents in the range of 0.1...10 × I_n) ±5.0% of the set value (at currents in the range of 10...40 × I_n)		
Start time [17], [18]		Minimum	Typical	Maximum
	PH3IPTOC: I_{Fault} = 2 × set *Start value*	15 ms	16 ms	17 ms
	I_{Fault} = 10 × set *Start value*	11 ms	14 ms	17 ms
	PH3HPTOC and PH3LPTOC: I_{Fault} = 2 × set *Start value*	23 ms	25 ms	28 ms
Reset time		<40 ms		
Reset ratio		Typically 0.96		
Retardation time [19]		<30 ms		
Operate time accuracy in definite time mode		±1.0% of the set value or ±20 ms		

Table continues on the next page

16 For further reference, see the Operation characteristics table
17 *Measurement mode* = default (depends on stage), current before fault = 0.0 × I_n, f_n = 50 Hz, fault current in one phase with nominal frequency injected from random phase angle, results based on statistical distribution of 1000 measurements
18 Includes the delay of the signal output contact
19 IFault ≤ 2 × set *Start value*

Characteristic	Value
Operate time accuracy in inverse time mode	±5.0% of the theoretical value or ±20 ms [20]
Suppression of harmonics	RMS: No suppression DFT: -50 dB at f = n × f_n, where n = 2, 3, 4, 5,… Peak-to-Peak: No suppression Peak-to-Peak + backup: No suppression

23.24.11 Three-phase non-directional instantaneous only overcurrent protection overcurrent protection (PHIPIOC)

Table 44: Three-phase non-directional instantaneous only overcurrent protection overcurrent protection (PHIPIOC)

Characteristic		Value		
Operation accuracy		Depending on the frequency of the measured current: fn ±2 Hz		
		±1.5% of set value or ±0.002 xIn (at currents in the range of 0.1…10 xIn) ±5.0% of the set value (at currents in the range of 10…40 xIn)		
Operate time [1, 2]		Minimum	Typical	Maximum
	IFault = 2x set Start value	9ms	14ms	16ms
	IFault = 10x set Start value	8ms	10ms	12ms
Reset time [2]		Typically <50ms		
Reset ratio		Typically 0.96		
Critical impulse time [2, 3]		Typically 2ms		

[20] Maximum *Start value* = 2.5 × I_n, *Start value* multiples in range of 1.5...20

[1] Current before fault = 0 xIn, fn = 50 Hz, fault current in one phase with nominal frequency injected from random phase angle, results based on statistical distribution of 1000 measurements.

[2] Measured with the high speed output (HSO).

[3] Start value = 2.00 xIn. Fault current in test increased from at 0 to 3 times set Start value.

23.24.12 Three-phase non-directional long-time overcurrent protection (PHLTPTOC)

Table 45: Three-phase non-directional long-time overcurrent protection (PHLTPTOC)

Characteristic		Value		
Operation accuracy		Depending on the frequency of the measured current: f_n ±2 Hz		
	PHLTPTOC	±1.5% of the set value or ±0.002 × I_n		
Start time[21]		Minimum	Typical	Maximum
	PHLTPTOC [22] I_{Fault} = 2 × set *Start value*	23 ms	26 ms	29 ms
Reset time		Typically <40 ms		
Reset ratio		Typically 0.96		
Retardation time [3]		<30 ms [23] <35 ms [24]		
Operate time accuracy in definite time mode		±1.0% of the set value or ±20 ms		
Operate time accuracy in inverse time mode		±5.0% of the theoretical value or ±20 ms [25]		
Suppression of harmonics		RMS: No suppression DFT: -50 dB at f = n × f_n, where n = 2, 3, 4, 5,… Peak-to-Peak: No suppression P-to-P+backup: No suppression		

21 = default (depends on stage), current before fault = 0.0 × I_n, f_n = 50 Hz, fault current in one phase with nominal frequency injected from random phase angle, results based on statistical distribution of 1000 measurements.
22 Includes the delay of the signal output contact (SO).
3 IFault ≤ 2 × set *Start value*
23 *Measurement mode* "DFT" or "RMS"
24 *Measurement mode* "Pk-to-Pk" or "Pk-to-Pk 0+ backup"
25 *Maximum Start value* = 2.5 × I_n, *Start value* multiples in the range of 1.5...20.

23.24.13 Three-phase directional overcurrent protection (DPHxPDOC)

Table 46: Three-phase directional overcurrent protection (DPHxPDOC)

Characteristic		Value		
Operation accuracy	DPHLPDOC	Depending on the frequency of the current/voltage measured: f_n ±2 Hz		
		Current: ±1.5% of the set value or ±0.002 × I_n Voltage: ±1.5% of the set value or ±0.002 × U_n Phase angle: ±2°		
	DPHHPDOC	Current: ±1.5% of the set value or ±0.002 × I_n (at currents in the range of 0.1…10 × I_n) ±5.0% of the set value (at currents in the range of 10…40 × I_n) Voltage: ±1.5% of the set value or ±0.002 × U_n Phase angle: ±2°		
Start time [26, 27]	I_{Fault}= 2.0 x set *Start value*	Minimum	Typical	Maximum
		39 ms	43 ms	47 ms
Reset time		Typically 40 ms		
Reset ratio		Typically 0.96		
Retardation time[28]		<30 ms [29] <35 ms [30]		
Operate time accuracy in definite time mode		±1.0% of the set value or ±20 ms		
Operate time accuracy in inverse time mode		±5.0% of the theoretical value or ±20 ms [31]		
Suppression of harmonics		DFT: -50 dB at f = n × f_n, where n = 2, 3, 4, 5,…		

[26] *Measurement mode* and *Pol quantity* = default, current before fault = 0.0 × I_n, voltage before fault = 1.0 × U_n, f_n = 50 Hz, fault current in one phase with nominal frequency injected from random phase angle, results based on statistical distribution of 1000 measurements
[27] Includes the delay of the signal output contact
[28] IFault ≤ 2 × set *Start value*
[29] *Measurement mode* "DFT" or "RMS"
[30] *Measurement mode* "Pk-to-Pk"
[31] Maximum *Start value* = 2.5 × I_n, *Start value* multiples in range of 1.5...20

23.24.14 Three-phase directional overcurrent protection (DPHxPDOC) main settings

Table 47: Three-phase directional overcurrent protection (DPHxPDOC) main settings

Parameter	Function	Value (Range)	Step
Start value	DPHLPDOC	0.05…10.00 × I_n	0.01
	DPHHPDOC	0.10...40.00 × I_n	0.01
Time multiplier	DPHxPDOC	0.025...15.000	0.005
Operate delay time	DPHxPDOC	40...300000 ms	10
Directional mode	DPHxPDOC	1 = Non-directional 2 = Forward 3 = Reverse	-
Characteristic angle	DPHxPDOC	-179...180°	1
Operating curve type [32]	DPHLPDOC	Definite or inverse time Curve type: 1, 2, 3, 4, 5, 6, 7, 8, 9, 10, 11, 12, 13, 14, 15, 17, 18, 19	
	DPHHPDOC	Definite or inverse time Curve type: 1, 3, 5, 9, 10, 12, 15, 17	

23.24.15 Directional three-independent-phase directional overcurrent protection (DPH3xPDOC)

Table 48: Directional three-independent-phase directional overcurrent protection (DPH3xPDOC)

Characteristic		Value		
Operation accuracy	DPH3LPDOC	Depending on the frequency of the current/voltage measured: f_n ±2 Hz		
		Current: ±1.5% of the set value or ±0.002 × I_n Voltage: ±1.5% of the set value or ±0.002 × U_n Phase angle: ±2°		
	DPH3HPDOC	Current: ±1.5% of the set value or ±0.002 × I_n (at currents in the range of 0.1…10 × I_n) ±5.0% of the set value (at currents in the range of 10…40 × I_n) Voltage: ±1.5% of the set value or ±0.002 × U_n Phase angle: ±2°		
Start time [33, 34]	I_{Fault}= 2.0 x set *Start value*	Minimum	Typical	Maximum

Table continues on the next page

[32] For further reference, see the Operating characteristics table

[33] *Measurement mode* and *Pol quantity* = default, current before fault = 0.0 × I_n, voltage before fault = 1.0 × U_n, f_n = 50 Hz, fault current in one phase with nominal frequency injected from random phase angle, results based on statistical distribution of 1000 measurements

[34] Includes the delay of the signal output contact

Characteristic	Value		
	38 ms	40 ms	43 ms
Reset time	<40 ms		
Reset ratio	Typically 0.96		
Retardation time	<35 ms		
Operate time accuracy in definite time mode	±1.0% of the set value or ±20 ms		
Operate time accuracy in inverse time mode	±5.0% of the theoretical value or ±20 ms [35]		
Suppression of harmonics	RMS: No suppression DFT: -50 dB at f = n × f_n, where n = 2, 3, 4, 5,… Peak-to-Peak: No suppression Peak-to-Peak + backup: No suppression		

23.24.16 Non-directional earth-fault protection (EFxPTOC)

Table 49: Non-directional earth-fault protection (EFxPTOC)

Characteristic		Value		
Operation accuracy		Depending on the frequency of the measured current: f_n ±2 Hz		
	EFLPTOC	±1.5% of the set value or ±0.002 × I_n		
	EFHPTOC and EFIPTOC	±1.5% of set value or ±0.002 × I_n (at currents in the range of 0.1…10 × I_n) ±5.0% of the set value (at currents in the range of 10…40 × I_n)		
Start time [36, 37]		Minimum	Typical	Maximum
	EFIPTOC : I_{Fault} = 2 × set *Start value* I_{Fault} = 10 × set *Start value*	16 ms 13 ms	18 ms 14 ms	20 ms 16 ms
	EFHPTOC and EFLPTOC : I_{Fault} = 2 × set *Start value*	23 ms	26 ms	29 ms
Reset time		Typically <40 ms		
Reset ratio		Typically 0.96		
Retardation time [38]		<30 ms [39], <35 ms [40]		

Table continues on the next page

35 Maximum *Start value* = 2.5 × I_n, *Start value* multiples in range of 1.5...20
36 *Measurement mode* = fault current in one phase with nominal frequency injected from random phase angle, results based onstatistical distribution of 1000 meas urements
37 Includes the delay of the signal output contact (SO).
38 IFault ≤ 2 × set *Start value*
39 *Measurement mode* “DFT” or “RMS”
40 *Measurement mode* “Pk-to-Pk” or “Pk-to-Pk 0+ backup”

Characteristic	Value
Operate time accuracy in definite time mode [6]	±1.0% of the set value or ±20 ms
Operate time accuracy in inverse time mode	±5.0% of the theoretical value or ±20 ms [41]
Suppression of harmonics	RMS: No suppression DFT: -50 dB at f = n × f_n, where n = 2, 3, 4, 5,… Peak-to-Peak: No suppression

23.24.17 Non-directional earth-fault protection (EFxPTOC) main settings

Table 50: Non-directional earth-fault protection (EFxPTOC) main settings

Parameter	Function	Value (Range)	Step
Start value	EFLPTOC	0.010…10.000 × I_n	0.005
	EFHPTOC	0.10...40.00 × I_n	0.01
	EFIPTOC	1.00...40.00 × I_n	0.01
Time multiplier	EFLPTOC and EFHPTOC	0.025...15.000	0.005
Operate delay time	EFLPTOC and EFHPTOC	40...300000 ms	10
	EFIPTOC	20...300000 ms	10
Operating curve type [42]	EFLPTOC	Definite or inverse time Curve type: 1, 2, 3, 4, 5, 6, 7, 8, 9, 10, 11, 12, 13, 14, 15, 17, 18, 19	
	EFHPTOC	Definite or inverse time Curve type: 1, 3, 5, 9, 10, 12, 15, 17	
	EFIPTOC	Definite time	

23.24.18 Non-directional earth-fault protection, instantaneous only stage (EFIPIOC)

Table 51: Non-directional earth-fault protection, instantaneous only stage (EFIPIOC)

Characteristic	Value
Operation accuracy	Depending on the frequency of the measured current: fn ±2 Hz
	±1.5% of set value or ±0.002 xIn (at currents in the range of 0.1…10 xIn)

Table continues on the next page

[6] Start time of the function also included.
[41] Maximum *Start value* = 2.5 × I_n, *Start value* multiples in range of 1.5...20.
[42] For further reference, see the Operation characteristics table

Characteristic		Value		
		±5.0% of the set value (at currents in the range of 10…40 xIn)		
Operate time [1, 2]		Minimum	Typical	Maximum
	IFault = 2x set Start value	12ms	15ms	19ms
	IFault = 10x set Start value	12ms	13ms	16ms
Reset time		Typically <40ms		
Reset ratio		Typically 0.96		
Critical impulse time [2, 3]		Typically 2ms		

23.24.19 Directional earth-fault protection (DEFxPDEF)

Table 52: Directional earth-fault protection (DEFxPDEF)

Characteristic		Value
Operation accuracy	DEFLPDEF	Depending on the frequency of the measured current: f_n ±2 Hz
		Current: ±1.5% of the set value or ±0.002 × I_n Voltage ±1.5% of the set value or ±0.002 × U_n Phase angle: ±2°

Table continues on the next page

[1] Current before fault = 0 xIn, fn = 50 Hz, fault current in one phase with nominal frequency injected from random phase angle, results based on statistical distribution of 1000 measurements.
[2] Measured with the power output (PO).
[3] Start value = 2.00 xIn. Fault current in test increased from at 0 to 3 times set Start value.

Characteristic		Value		
	DEFHPDEF	Current: ±1.5% of the set value or ±0.002 × I_n (at currents in the range of 0.1…10 × I_n) ±5.0% of the set value (at currents in the range of 10…40 × I_n) Voltage: ±1.5% of the set value or ±0.002 × U_n Phase angle: ±2°		
Start time [43, 44]	DEFHPDEF	Minimum	Typical	Maximum
	I_{Fault} = 2 × set *Start value*	42 ms	46 ms	49 ms
	DEFLPDEF	Minimum	Typical	Maximum
	I_{Fault} = 2 × set *Start value*	58 ms	62 ms	66 ms
Reset time		Typically 40 ms		
Reset ratio		Typically 0.96		
Retardation time		<30 ms		
Operate time accuracy in definite time mode		±1.0% of the set value or ±20 ms		
Operate time accuracy in inverse time mode		±5.0% of the theoretical value or ±20 ms [45]		
Suppression of harmonics		RMS: No suppression DFT: -50 dB at f = n × f_n, where n = 2, 3, 4, 5,… Peak-to-Peak: No suppression		

23.24.20 Directional earth-fault protection (DEFxPDEF) main settings

Table 53: Directional earth-fault protection (DEFxPDEF) main settings

Parameter	Function	Value (Range)	Step
Start value	DEFLPDEF	0.005...10.000 × I_n	0.0005
	DEFHPDEF	0.10...40.00 × I_n	0.01
Directional mode	DEFxPDEF	1 = Non-directional 2 = Forward 3 = Reverse	-

Table continues on the next page

[43] Set *Operate curve type* = IEC definite time, *Measurement mode* = default (depends on stage), current before fault = 0.0 × I_n, f_n = 50 Hz, earth-fault current with nominal frequency injected from random phase angle, results based on statistical distribution of 1000 measurements
[44] Includes the delay of the signal output contact
[45] Maximum *Start value* = 2.5 × I_n, *Start value* multiples in range of 1.5...20

Parameter	Function	Value (Range)	Step
Time multiplier	DEFxPDEF	0.025...15.000	0.005
Operate delay time	DEFLPDEF	50...300000 ms	10
	DEFHPDEF	40...300000 ms	10
Operating curve type [46]	DEFLPDEF	Definite or inverse time Curve type: 1, 2, 3, 4, 5, 6, 7, 8, 9, 10, 11, 12, 13, 14, 15, 17, 18, 19	
	DEFHPDEF	Definite or inverse time Curve type: 1, 3, 5, 15, 17	
Operation mode	DEFxPDEF	1 = Phase angle 2 = IoSin 3 = IoCos 4 = Phase angle 80 5 = Phase angle 88	-

23.24.21 Three-phase power directional element (DPSRDIR) main settings

Table 54: Three-phase power directional element (DPSRDIR) main settings

Parameter	Function	Value (Range)	Step
Release delay time	DPSRDIR	0...1000 ms	1
Characteristic angle	DPSRDIR	-179...180°	1
Directional mode	DPSRDIR	1 = Non-directional 2 = Forward 3 = Reverse	-

23.24.22 Neutral power directional element (DNZSRDIR) main settings

Table 55: Neutral power directional element (DNZSRDIR) main settings

Parameter	Function	Value (Range)	Step
Release delay time	DNZSRDIR	0...1000 ms	10
Directional mode	DNZSRDIR	1 = Non-directional 2 = Forward 3 = Reverse	-
Characteristic angle	DNZSRDIR	-179...180°	1
Pol quantity	DNZSRDIR	3 = Zero seq. volt. 4 = Neg. seq. volt.	-

[46] For further reference, see the Operating characteristics table

23.24.23 Load blinder (LBRDOB)

Table 56: Load blinder (LBRDOB)

Characteristic	Value
Operation accuracy	Depending on the frequency of the current measured: f_n
	Current: ±1.5% of the set value or ±0.002 × I_n Voltage: ±1.5% of the set value or ±0.002 × U_n Impedance accuracy: ±3% of the set value (In range load angle<75 deg) ±4.5% of the set value (In range 75 deg<load angle<83 deg) ±8% of the set value (In range load angle>83 deg) Phase angle: ±2°
Reset ratio	Typically 0.96
Operation time [47, 48]	Typically 30 ms
Reset time	Typically 25 ms

23.24.24 Load blinder (LBRDOB) main settings

Table 57: Load blinder (LBRDOB) main settings

Parameter	Function	Value (Range)	Step
Resistive reach Fw	LBRDOB	1.00...6000.00 Ohm	0.01
Resistive reach Rv	LBRDOB	1.00...6000.00 Ohm	0.01
Max impedance angle	LBRDOB	5...85 Deg	1

Table continues on the next page

[47] f_n= 50Hz, results based on statistical distribution of 1000 measurements
[48] Includes the delay of the signal output contact

Parameter	Function	Value (Range)	Step
Min impedance angle	LBRDOB	-85...-5 Deg	1
Directional mode	LBRDOB	1= Non-directional 2= Forward 3= Reverse	-

23.24.25 Cold load pickup (CLPGAPC)

Table 58: Cold load pickup (CLPGAPC)

Characteristic	Value
Operation accuracy	Depending on the frequency of the measured current: f_n ±2 Hz
	Current measurement: ±1.5% of the set value or ±0.002 x I_n Voltage measurement: ±1.5% of the set value or ±0.002 x U_n
Operate time accuracy in definite time mode	±1.0% of the set value or ±20 ms
Suppression of harmonics	DFT: -50 dB at f = n × f_n, where n = 2, 3, 4, 5, …

23.24.26 Cold load pickup (CLPGAPC) main settings

Table 59: Cold load pickup (CLPGAPC) main settings

Parameter	Function	Values (Range)	Step
Fast reset delay	CLPGAPC	0...3600000	1
Type of time reset	CLPGAPC	1=Freeze Op timer 2=Decrease Op timer	
Cold state delay	CLPGAPC	0...86400	1
Pickup duration	CLPGAPC	0...86400	1

23.24.27 Admittance-based earth-fault protection (EFPADM)

Table 60: Admittance-based earth-fault protection (EFPADM)

Characteristic	Value		
Operation accuracy [49]	At the frequency f = f_n		
	±1.0% or ±0.01 mS (In range of 0.5...100 mS)		
Start time [50]	Minimum	Typical	Maximum
	56 ms	60 ms	64 ms
Reset time	40 ms		
Operate time accuracy	±1.0% of the set value of ±20 ms		
Suppression of harmonics	-50 dB at f = n × f_n, where n = 2, 3, 4, 5,…		

23.24.28 Admittance-based earth-fault protection (EFPADM) main settings

Table 61: Admittance-based earth-fault protection (EFPADM) main settings

Parameter	Function	Value (Range)	Step
Voltage start value	EFPADM	0.01...2.00 × U_n	0.01
Directional mode	EFPADM	1 = Non-directional 2 = Forward 3 = Reverse	-
Operation mode	EFPADM	1 = Yo 2 = Go 3 = Bo 4 = Yo, Go 5 = Yo, Bo 6 = Go, Bo 7 = Yo, Go, Bo	-
Operate delay time	EFPADM	60...300000 ms	10
Circle radius	EFPADM	0.05...500.00 mS	0.01
Circle conductance	EFPADM	-500.00...500.00 mS	0.01
Circle susceptance	EFPADM	-500.00...500.00 mS	0.01
Conductance forward	EFPADM	-500.00...500.00 mS	0.01
Conductance reverse	EFPADM	-500.00...500.00 mS	0.01

Table continues on the next page

[49] Uo = 1.0 × U_n
[50] Includes the delay of the signal output contact, results based on statistical distribution of 1000 measurements

Parameter	Function	Value (Range)	Step
Susceptance forward	EFPADM	-500.00...500.00 mS	0.01
Susceptance reverse	EFPADM	-500.00...500.00 mS	0.01
Conductance tilt Ang	EFPADM	-30...30°	1
Susceptance tilt Ang	EFPADM	-30...30°	1

23.24.29 Multifrequency admittance-based earth-fault protection (MFADPSDE)

Table 62: Multifrequency admittance-based earth-fault protection (MFADPSDE)

Characteristic	Value
Operation accuracy	Depending on the frequency of the measured voltage: f_n ±2 Hz
	±1.5% of the set value or ±0.002 × U_n
Start time [51]	Typically 35 ms
Reset time	Typically 40 ms
Operate time accuracy	±1.0% of the set value or ±20 ms

23.24.30 Multifrequency admittance-based earth-fault protection (MFADPSDE) main settings

Table 63: Multifrequency admittance-based earth-fault protection (MFADPSDE) main settings

Parameter	Function	Value (Range)	Step
Directional mode	MFADPSDE	2 = Forward 3 = Reverse	-
Voltage start value	MFADPSDE	0.01...1.00 × U_n	0.01
Operate delay time	MFADPSDE	60...1200000 ms	10
Operating quantity	MFADPSDE	1 = Adaptive 2 = Amplitude 3 = Resistive	-
Min operate current	MFADPSDE	0.005...5.000 × I_n	0.001
Operation mode	MFADPSDE	1 = Intermittent EF 2 = Transient EF 3 = General EF 4 = Alarming EF	-
Peak counter limit	MFADPSDE	2...20	1

[51] Includes the delay of the signal output contact, results based on statistical distribution of 1000 measurements

23.24.31 Touch voltage-based earth-fault current protection IFPTOC (ANSI 46SNQ/59N)

Table 64: Touch voltage-based earth-fault current protection IFPTOC (ANSI 46SNQ/59N)

Characteristics	Value
Operation accuracy	Depending on the frequency of the measured current f_n ±2 Hz
	Earth-fault current and touch voltage: ±1% of the set value or ±0.005 × I_n for I_F^{est} Accuracy of U_{EPR}^{est} follows I_F^{est} accuracy. Residual voltage: ±1.5% of the set value or ±0.002 × U_n Residual current: ±1.5% of the set value or ±0.002 × I_n (at currents ≤10 x I_n, when Uo is nominal) ±5.0% of the set value (at currents > 10 x I_n)
Start time [52]	Typically 45 ms
Reset time	<30 ms
Reset ratio	Typically 0.96
Retardation time	<50 ms
Operate time accuracy	±1.0% of the set value or ±20 ms (DT) ±3% of the theoretical value or ±40 ms (IDMT)

23.24.32 Touch voltage-based earth-fault current protection IFPTOC (ANSI 46SNQ/59N) main settings

Table 65: Touch voltage-based earth-fault current protection IFPTOC (ANSI 46SNQ/59N) main settings

Parameter	Function	Value (Range)	Step
Operation mode	IFPTOC	1=Alarming EF 2=Tripping EF	
Voltage start value	IFPTOC	0.01...1.00 xUn	0.01
XC stage PP V Val	IFPTOC	0.01...1.00 xUn	0.01
XC stage PP Chg Val	IFPTOC	0.00...1.00 xUn	0.01
Operating curve type	IFPTOC	15=Definite time 18=Inverse time EN50522 19=Inverse time IEEE80	
EF current Str Val	IFPTOC	0.005...1.000 xIn	0.001
IEEE multiplier	IFPTOC	50.0...5000.0	0.1

Table continues on the next page

[52] Includes the delay of the signal output contact.

Parameter	Function	Value (Range)	Step
IDMT stage Min Op Tm	IFPTOC	50...6000 ms	10
IDMT stage Max Op Tm	IFPTOC	500...7200000 ms	10
Touch Vol Str Val	IFPTOC	10.0...2900.0 V	0.1
Operation principle	IFPTOC	1=EF current-based 2=Touch voltage-based	
UTp multiplier	IFPTOC	0.10...5.00	0.01
Ena RF compensation	IFPTOC	0=Disable 1=Enable	
CB delay Comp	IFPTOC	0...200 ms	1
Intr EF counter Lim	IFPTOC	3...20	1

23.24.33 Wattmetric-based earth-fault protection (WPWDE)

Table 66: Wattmetric-based earth-fault protection (WPWDE)

Characteristic	Value
Operation accuracy	Depending on the frequency of the measured current: f_n ±2 Hz
	Current and voltage: ±1.5% of the set value or ±0.002 × I_n Power: ±3% of the set value or ±0.002 × P_n
Start time [53, 54]	Typically 63 ms
Reset time	Typically 40 ms
Reset ratio	Typically 0.96
Operate time accuracy in definite time mode	±1.0% of the set value or ±20 ms
Operate time accuracy in IDMT mode	±5.0% of the set value or ±20 ms
Suppression of harmonics	-50 dB at f = n × f_n, where n = 2,3,4,5,...

[53] Io varied during the test, U_o = 1.0 × U_n = phase to earth voltage during earth fault in compensated or un-earthed network, the residual power value before fault = 0.0 pu, f_n = 50 Hz, results based on statistical distribution of 1000 measurements

[54] Includes the delay of the signal output contact

23.24.34 Wattmetric-based earth-fault protection (WPWDE) main settings

Table 67: Wattmetric-based earth-fault protection (WPWDE) main settings

Parameter	Function	Value (Range)	Step
Directional mode	WPWDE	2 = Forward 3 = Reverse	-
Current start value	WPWDE	0.010...5.000 × I_n	0.001
Voltage start value	WPWDE	0.010...1.000 × U_n	0.001
Power start value	WPWDE	0.003...1.000 × S_n	0.001
Reference power	WPWDE	0.050...1.000 × S_n	0.001
Characteristic angle	WPWDE	-179...180°	1
Time multiplier	WPWDE	0.025...2.000	0.005
Operating curve type [55]	WPWDE	Definite or inverse time Curve type: 5, 15, 20	
Operate delay time	WPWDE	60...300000 ms	10
Min operate current	WPWDE	0.010. 1.000 × I_n	0.001
Min operate voltage	WPWDE	0.01. 1.00 × U_n	0.01

23.24.35 Transient/intermittent earth-fault protection (INTRPTEF)

Table 68: Transient/intermittent earth-fault protection (INTRPTEF)

Characteristic	Value
Operation accuracy (Uo criteria with transient protection)	Depending on the frequency of the measured current: f_n ±2 Hz
	±1.5% of the set value or ±0.002 × Uo
Operate time accuracy	±1.0% of the set value or ±20 ms
Suppression of harmonics	DFT: -50 dB at f = n × f_n, where n = 2, 3, 4, 5

23.24.36 Transient/intermittent earth-fault protection (INTRPTEF) main settings

Table 69: Transient/intermittent earth-fault protection (INTRPTEF) main settings

Parameter	Function	Value (Range)	Step
Directional mode	INTRPTEF	1 = Non-directional 2 = Forward 3 = Reverse	-
Operate delay time	INTRPTEF	40...1200000 ms	10

Table continues on the next page

[55] For further reference, see the Operating characteristics table

Parameter	Function	Value (Range)	Step
Voltage start value	INTRPTEF	0.05...0.50 × U_n	0.01
Operation mode	INTRPTEF	1 = Intermittent EF 2 = Transient EF	-
Peak counter limit	INTRPTEF	2...20	1
Min operate current	INTRPTEF	0.01. 1.00 × I_n	0.01

23.24.37 Harmonics-based earth-fault protection (HAEFPTOC)

Table 70: Harmonics-based earth-fault protection (HAEFPTOC)

Characteristic	Value
Operation accuracy	Depending on the frequency of the measured current: f_n ±2 Hz
	±5% of the set value or ±0.004 × I_n
Start time [56, 57]	Typically 77 ms
Reset time	Typically 40 ms
Reset ratio	Typically 0.96
Operate time accuracy in definite time mode	±1.0% of the set value or ±20 ms
Operate time accuracy in IDMT mode [58]	±5.0% of the set value or ±20 ms
Suppression of harmonics	-50 dB at f = f_n
	-3 dB at f = 13 × f_n

23.24.38 Harmonics-based earth-fault protection (HAEFPTOC) main settings

Table 71: Harmonics-based earth-fault protection (HAEFPTOC) main settings

Parameter	Function	Value (Range)	Step
Start value	HAEFPTOC	0.05. 5.00 × I_n	0.01
Time multiplier	HAEFPTOC	0.025...15.000	0.005
Operate delay time	HAEFPTOC	100...300000 ms	10
Operating curve type [59]	HAEFPTOC	Definite or inverse time Curve type: 1, 2, 3, 4, 5, 6, 7, 8, 9, 10, 11, 12, 13, 14, 15, 17, 18, 19	
Minimum operate time	HAEFPTOC	100...200000 ms	10

[56] Fundamental frequency current = 1.0 × I_n, harmonics current before fault = 0.0 × I_n, harmonics fault current 2.0 × *Start value* , results based on statistical distribution of 1000 measurements
[57] Includes the delay of the signal output contact
[58] Maximum *Start value* = 2.5 × I_n, *Start value* multiples in range of 2...20
[59] For further reference, see the Operation characteristics table

23.24.39 Negative-sequence overcurrent protection (NSPTOC)

Table 72: Negative-sequence overcurrent protection (NSPTOC)

Characteristic		Value		
Operation accuracy		Depending on the frequency of the measured current: f_n ±2 Hz		
		±1.5% of the set value or ±0.002 × I_n		
Start time [60, 61]		Minimum	Typical	Maximum
	I_{Fault} = 2 × set *Start value*	23 ms	26 ms	28 ms
	I_{Fault}= 10 × set *Start value*	15 ms	18 ms	20 ms
Reset time		Typically 40 ms		
Reset ratio		Typically 0.96		
Retardation time		<35 ms		
Operate time accuracy in definite time mode		±1.0% of the set value or ±20 ms		
Operate time accuracy in inverse time mode		±5.0% of the theoretical value or ±20 ms [62]		
Suppression of harmonics		DFT: -50 dB at f = n × f_n, where n = 2, 3, 4, 5,…		

23.24.40 Negative-sequence overcurrent protection (NSPTOC) main settings

Table 73: Negative-sequence overcurrent protection (NSPTOC) main settings

Parameter	Function	Value (Range)	Step
Start value	NSPTOC	0.01...5.00 × I_n	0.01
Time multiplier	NSPTOC	0.025...15.000	0.005
Operate delay time	NSPTOC	40...200000 ms	10
Operating curve type [63]	NSPTOC	Definite or inverse time Curve type: 1, 2, 3, 4, 5, 6, 7, 8, 9, 10, 11, 12, 13, 14, 15, 17, 18, 19	

60 Negative sequence current before fault = 0.0, f_n = 50 Hz, results based on statistical distribution of 1000 measurements
61 Includes the delay of the signal output contact
62 Maximum *Start value* = 2.5 × I_n, *Start value* multiples in range of 1.5...20
63 For further reference, see the Operation characteristics table

23.24.41 Phase discontinuity protection (PDNSPTOC)

Table 74: Phase discontinuity protection (PDNSPTOC)

Characteristic	Value
Operation accuracy	Depending on the frequency of the measured current: f_n ±2 Hz
	±2% of the set value
Start time	<70 ms
Reset time	Typically 40 ms
Reset ratio	Typically 0.96
Retardation time	<35 ms
Operate time accuracy in definite time mode	±1.0% of the set value or ±20 ms
Suppression of harmonics	DFT: -50 dB at f = n × f_n, where n = 2, 3, 4, 5,...

23.24.42 Phase discontinuity protection (PDNSPTOC) main settings

Table 75: Phase discontinuity protection (PDNSPTOC) main settings

Parameter	Function	Value (Range)	Step
Start value	PDNSPTOC	10...100%	1
Operate delay time	PDNSPTOC	100...30000 ms	1
Min phase current	PDNSPTOC	0.05...0.30 × I_n	0.01

23.24.43 Residual overvoltage protection (ROVPTOV)

Table 76: Residual overvoltage protection (ROVPTOV)

Characteristic		Value		
Operation accuracy		Depending on the frequency of the measured voltage: f_n ±2 Hz		
		±1.5% of the set value or ±0.002 × U_n		
Start time [64, 65]	U_{Fault} = 2 × set *Start value*	Minimum	Typical	Maximum
		22 ms	25 ms	29 ms
Reset time		Typically 40 ms		
Reset ratio		Typically 0.96		
Retardation time		<35 ms		

Table continues on the next page

64 Residual voltage before fault = 0.0 × U_n, f_n = 50 Hz, residual voltage with nominal frequency injected from random phase angle, results based on statistical distribution of 1000 measurements

65 Includes the delay of the signal output contact

Characteristic	Value
Operate time accuracy in definite time mode	±1.0% of the set value or ±20 ms
Suppression of harmonics	DFT: -50 dB at f = n × f_n, where n = 2, 3, 4, 5,…

23.24.44 Residual overvoltage protection (ROVPTOV) main settings

Table 77: Residual overvoltage protection (ROVPTOV) main settings

Parameter	Function	Value (Range)	Step
Start value	ROVPTOV	0.010...1.000 × U_n	0.001
Operate delay time	ROVPTOV	20...300000 ms	1

23.24.45 Single-phase overvoltage protection (PHAPTOV)

Table 78: Single-phase overvoltage protection (PHAPTOV)

Characteristic		Value		
Operation accuracy		Depending on the frequency of the measured voltage: f_n ±2 Hz		
		±1.5% of the set value or ±0.002 × U_n		
Start time [66, 67]	U_{Fault} = 1.1 × set *Start value*	Minimum	Typical	Maximum
		25 ms	28 ms	32 ms
Reset time		Typically 40 ms		
Reset ratio		Depends on the set *Relative hysteresis*		
Retardation time		<35 ms		
Operate time accuracy in definite time mode		±1.0% of the set value or ±20 ms		
Operate time accuracy in inverse time mode		±7.0% of the theoretical value or ±20 ms [68]		
Suppression of harmonics		DFT: -50 dB at f = n × f_n, where n = 2, 3, 4, 5,…		

23.24.46 Single-phase overvoltage protection (PHAPTOV) main settings

Table 79: Single-phase overvoltage protection (PHAPTOV) main settings

Parameter	Function	Value (Range)	Step
Start value	PHAPTOV	0.05...1.60 × U_n	0.01
Time multiplier	PHAPTOV	0.05...15.00	0.01

Table continues on the next page

66 *Start value* = 1.0 × U_n, Voltage before fault = 0.9 × U_n, f_n = 50 Hz, overvoltage in one phase-to-phase with nominal frequency injected from random phase angle, results based on statistical distribution of 1000 measurements

67 Includes the delay of the signal output contact

68 Maximum *Start value* = 1.20 × U_n, *Start value* multiples in range of 1.10...2.00

Parameter	Function	Value (Range)	Step
Operate delay time	PHAPTOV	20...300000 ms	10
Operating curve type [69]	PHAPTOV	Definite or inverse time Curve type: 5, 15, 17, 18, 19, 20	

23.24.47 Three-phase undervoltage protection (PHPTUV)

Table 80: Three-phase undervoltage protection (PHPTUV)

Characteristic		Value		
Operation accuracy		Depending on the frequency of the voltage measured: f_n ±2 Hz		
		±1.5% of the set value or ±0.002 × U_n		
Start time [70]		Minimum	Typical	Maximum
	U_{Fault} = 0.85 × set *Start value*[71]	21 ms	24 ms	29 ms
	U_{Fault} = 0.85 × set *Start value*[72]	56 ms	60 ms	64 ms
Reset time		Typically 40 ms		
Reset ratio		Depends on the set *Relative hysteresis*		
Retardation time		<35 ms		
Operate time accuracy in definite time mode		±1.0% of the set value or ±20 ms		
Operate time accuracy in inverse time mode		±5.0% of the theoretical value or ±20 ms [73]		
Suppression of harmonics		DFT: -50 dB at f = n × f_n, where n = 2, 3, 4, 5,…		

23.24.48 Three-phase undervoltage protection (PHPTUV) main settings

Table 81: Three-phase undervoltage protection (PHPTUV) main settings

Parameter	Function	Value (Range)	Step
Start value	PHPTUV	0.05...1.20 × U_n	0.01
Time multiplier	PHPTUV	0.05...15.00	0.01
Operate delay time	PHPTUV	20...300000 ms	10
Operating curve type[74]	PHPTUV	Definite or inverse time Curve type: 5, 15, 21, 22, 23	

69 For further reference, see the Operation characteristics table
70 *Start value* = 0.97 × U_n, voltage level before fault = 1 × U_n, f_n = 50 Hz, undervoltage in one phase-to-phase voltage injected from random phase angle, results based on statistical distribution of 1000 measurements, includes the delay the signal output contact
71 Start time is accelerated when set *Operate delay time* < 60ms. The shorter the set delay, the shorter the start time. Here measurements done for *Operate delay time* = 20ms
72 Valid when set *Operate delay time* ≥ 60ms or inverse time curve selected
73 Minimum *Start value* = 0.50, *Start value* multiples in range of 0.90...0.20
74 For further reference, see the Operation characteristics table

23.24.49 Single-phase undervoltage protection (PHAPTUV)

Table 82: Single-phase undervoltage protection (PHAPTUV)

Characteristic		Value		
Operation accuracy		Depending on the frequency of the voltage measured: f_n ±2 Hz		
		±1.5% of the set value or ±0.002 × U_n		
Start time [75, 76]	U_{Fault} = 0.9 × set *Start value*	Minimum	Typical	Maximum
		64 ms	68 ms	71 ms
Reset time		Typically 40 ms		
Reset ratio		Depends on the set *Relative hysteresis*		
Retardation time		<35 ms		
Operate time accuracy in definite time mode		±1.0% of the set value or ±20 ms		
Operate time accuracy in inverse time mode		±5.0% of the theoretical value or ±20 ms [77]		
Suppression of harmonics		DFT: -50 dB at f = n × f_n, where n = 2, 3, 4, 5,…		

23.24.50 Single-phase undervoltage protection (PHAPTUV) main settings

Table 83: Single-phase undervoltage protection (PHAPTUV) main settings

Parameter	Function	Value (Range)	Step
Start value	PHAPTUV	0.05...1.20 × U_n	0.01
Time multiplier	PHAPTUV	0.05...15.00	0.01
Operate delay time	PHAPTUV	20...300000 ms	10
Operating curve type[78]	PHAPTUV	Definite or inverse time Curve type: 5, 15, 21, 22, 23	

23.24.51 Three-phase overvoltage variation protection (PHVPTOV)

Table 84: Three-phase overvoltage variation protection (PHVPTOV)

Characteristic	Value
Operation accuracy	Depending on the frequency of the measured voltage: f_n
	±1.5% of the set value or ±0.002 × U_n
Reset ratio	Depends on the set *Relative hysteresis*
Operate time accuracy in definite time mode	±1.0% of the set value or ±20 ms

[75] *Start value* = 1.0 × U_n, Voltage before fault = 1.1 × U_n, f_n = 50 Hz, undervoltage in one phase-to-phase with nominal frequency injected from random phase angle, results based on statistical distribution of 1000 measurements
[76] Includes the delay of the signal output contact
[77] Minimum *Start value* = 0.50, *Start value* multiples in range of 0.90...0.20
[78] For further reference, see the Operation characteristics table

23.24.52 Three-phase overvoltage variation protection (PHVPTOV) main settings

Table 85: Three-phase overvoltage variation protection (PHVPTOV) main settings

Parameter	Function	Value (Range)	Step
Start value	PHVPTOV	0.05...3.00 × U_n	0.01
Time interval	PHVPTOV	1...120 min	1
Num of start phases	PHVPTOV	1 = 1 out of 3 2 = 2 out of 3 3 = 3 out of 3	-
Voltage selection	PHVPTOV	1 = phase-to-earth 2 = phase-to-phase	-

23.24.53 Three-phase overvoltage protection (PHPTOV)

Table 86: Three-phase overvoltage protection (PHPTOV)

Characteristic		Value		
Operation accuracy		Depending on the frequency of the measured voltage: f_n ±2 Hz		
		±1.5% of the set value or ±0.002 × U_n		
Start time [79, 80]		Minimum	Typical	Maximum
	U_{Fault} = 1.1 × set *Start value*	23 ms	27 ms	31 ms
Reset time		Typically 40 ms		
Reset ratio		Depends on the set *Relative hysteresis*		
Retardation time		<35 ms		
Operate time accuracy in definite time mode		±1.0% of the set value or ±20 ms		
Operate time accuracy in inverse time mode		±7.0% of the theoretical value or ±20 ms [81]		
Suppression of harmonics		DFT: -50 dB at f = n × f_n, where n = 2, 3, 4, 5,...		

23.24.54 Three-phase overvoltage protection (PHPTOV) main settings

Table 87: Three-phase overvoltage protection (PHPTOV) main settings

Parameter	Function	Value (Range)	Step
Start value	PHPTOV	0.05...1.60 × U_n	0.01
Time multiplier	PHPTOV	0.05...15.00	0.01

Table continues on the next page

79 *Start value* = 1.0 × U_n, Voltage before fault = 0.9 × U_n, f_n = 50 Hz, overvoltage in one phase-to-phase with nominal frequency injected from random phase angle, results based on statistical distribution of 1000 measurements

80 Includes the delay of the signal output contact

81 Maximum *Start value* = 1.20 × U_n, *Start value* multiples in range of 1.10...2.00

Parameter	Function	Value (Range)	Step
Operate delay time	PHPTOV	20...300000 ms	10
Operating curve type [82]	PHPTOV	Definite or inverse time Curve type: 5, 15, 17, 18, 19, 20	

23.24.55 Positive-sequence overvoltage protection (PSPTOV)

Table 88: Positive-sequence overvoltage protection (PSPTOV)

Characteristic		Value		
Operation accuracy		Depending on the frequency of the voltage measured: f_n		
		±1.5% of the set value or ±0.002 × U_n		
Start time [83, 84]	U_{Fault} = 1.1 × set *Start value*	Minimum	Typical	Maximum
		29 ms	32 ms	34 ms
	U_{Fault} = 2.0 × set *Start value*	32 ms	24 ms	26 ms
Reset time		Typically 40 ms		
Reset ratio		Typically 0.96		
Retardation time		<35 ms		
Operate time accuracy in definite time mode		±1.0% of the set value or ±20 ms		
Suppression of harmonics		DFT: -50 dB at f = n × f_n, where n = 2, 3, 4, 5,…		

23.24.56 Positive-sequence overvoltage protection (PSPTOV) main settings

Table 89: Positive-sequence overvoltage protection (PSPTOV) main settings

Parameter	Function	Value (Range)	Step
Start value	PSPTOV	0.400...1.600 × U_n	0.001
Operate delay time	PSPTOV	40...120000 ms	10

[82] For further reference, see the Operation characteristics table
[83] Positive-sequence voltage before fault = 0.0 × U_n, f_n = 50 Hz, positive-sequence overvoltage of nominal frequency injected from random phase angle
[84] Includes the delay of the signal output contact (SO).

23.24.57 Positive-sequence undervoltage protection (PSPTUV)

Table 90: Positive-sequence undervoltage protection (PSPTUV)

Characteristic		Value		
Operation accuracy		Depending on the frequency of the measured voltage: f_n ±2 Hz		
		±1.5% of the set value or ±0.002 × U_n		
Start time [85, 86]		Minimum	Typical	Maximum
	U_{Fault} = 0.99 × set *Start value*	52 ms	55 ms	58 ms
	U_{Fault} = 0.9 × set *Start value*	44 ms	47 ms	50 ms
Reset time		Typically 40 ms		
Reset ratio		Depends on the set *Relative hysteresis*		
Retardation time		<35 ms		
Operate time accuracy in definite time mode		±1.0% of the set value or ±20 ms		
Suppression of harmonics		DFT: -50 dB at f = n × f_n, where n = 2, 3, 4, 5,…		

23.24.58 Positive-sequence undervoltage protection (PSPTUV) main settings

Table 91: Positive-sequence undervoltage protection (PSPTUV) main settings

Parameter	Function	Value (Range)	Step
Start value	PSPTUV	0.010...1.200 × U_n	0.001
Operate delay time	PSPTUV	40...120000 ms	10
Voltage block value	PSPTUV	0.01...1.00 × U_n	0.01

23.24.59 Negative-sequence overvoltage protection (NSPTOV)

Table 92: Negative-sequence overvoltage protection (NSPTOV)

Characteristic		Value		
Operation accuracy		Depending on the frequency of the voltage measured: f_n		
		±1.5% of the set value or ±0.002 × U_n		
Start time[87, 88]	U_{Fault} = 1.1 × set *Start value*	Minimum	Typical	Maximum
		33 ms	35 ms	37 ms
	U_{Fault} = 2.0 × set *Start value*	24 ms	26 ms	28 ms
Reset time		Typically 40 ms		
Reset ratio		Typically 0.96		

Table continues on the next page

85 *Start value* = 1.0 × U_n, positive-sequence voltage before fault = 1.1 × U_n, f_n = 50 Hz, positive sequence undervoltage with nominal frequency injected from random phase angle, results based on statistical distribution of 1000 measurements

86 Includes the delay of the signal output contact

87 Negative-sequence voltage before fault = 0.0 × U_n, f_n = 50 Hz, negative-sequence overvoltage with nominal frequency injected from random phase angle, results based on statistical distribution of 1000 measurements

88 Includes the delay of the signal output contact (SO).

Characteristic	Value
Retardation time	<35 ms
Operate time accuracy in definite time mode	±1.0% of the set value or ±20 ms
Suppression of harmonics	DFT: -50 dB at f = n × f_n, where n = 2, 3, 4, 5,…

23.24.60 Negative-sequence overvoltage protection (NSPTOV) main settings

Table 93: Negative-sequence overvoltage protection (NSPTOV) main settings

Parameter	Function	Value (Range)	Step
Start value	NSPTOV	0.010...1.000 × U_n	0.001
Operate delay time	NSPTOV	20...120000 ms	1

23.24.61 Frequency protection (FRPFRQ)

Table 94: Frequency protection (FRPFRQ)

Characteristic		Value
Operation accuracy	f>/f<	±5 mHz
	df/dt	±50 mHz/s (in range |df/dt| <5 Hz/s) ±2.0% of the set value (in range 5 Hz/s < |df/dt| < 15 Hz/s)
Start time	f>/f<	<80 ms[89]
	df/dt	<120 ms
Reset time		<150 ms
Operate time accuracy		±1.0% of the set value or ±30 ms

[89] Applies to sudden frequency change of ≤0.2 Hz or to frequency slope of ≤ 5 Hz/s. When frequency change is outside of these limits, start may be delayed by additional 100 ms to prevent false starts when connecting / disconnecting heavy loads.

23.24.62 Frequency protection (FRPFRQ) main settings

Table 95: Frequency protection (FRPFRQ) main settings

Parameter	Function	Value (Range)	Step
Operation mode	FRPFRQ	1 = Freq< 2 = Freq> 3 = df/dt 4 = Freq< + df/dt 5 = Freq> + df/dt 6 = Freq< OR df/dt 7 = Freq> OR df/dt	-
Start value Freq>	FRPFRQ	0.9000...1.2000 × f_n	0.0001
Start value Freq<	FRPFRQ	0.8000...1.1000 × f_n	0.0001
Start value df/dt	FRPFRQ	-0.2000...0.2000 × f_n/s	0.0001
Operate Tm Freq	FRPFRQ	80...5400000 ms	10
Operate Tm df/dt	FRPFRQ	120...200000 ms	10

23.24.63 Three-phase voltage-dependent overcurrent protection (PHPVOC)

Table 96: Three-phase voltage-dependent overcurrent protection (PHPVOC)

Characteristic	Value
Operation accuracy	Depending on the frequency of the measured current and voltage: f_n ±2 Hz
	Current: ±1.5% of the set value or ± 0.002 × I_n Voltage: ±1.5% of the set value or ±0.002 × U_n
Start time [90, 91]	Typically 26 ms
Reset time	Typically 40 ms
Reset ratio	Typically 0.96
Operate time accuracy in definite time mode	±1.0% of the set value or ±20 ms
Operate time accuracy in inverse time mode	±5.0% of the set value or ±20 ms
Suppression of harmonics	-50 dB at f = n × f_n, where n = 2, 3, 4, 5,…

90 *Measurement mode* = default, current before fault = 0.0 × I_n, f_n = 50 Hz, fault current in one phase with nominal frequency injected from random phase angle, results based on statistical distribution of 1000 measurements

91 Includes the delay of the signal output contact

23.24.64 Three-phase voltage-dependent overcurrent protection (PHPVOC) main settings

Table 97: Three-phase voltage-dependent overcurrent protection (PHPVOC) main settings

Parameter	Function	Value (Range)	Step
Start value	PHPVOC	0.05...5.00 × I_n	0.01
Start value low	PHPVOC	0.05...1.00 × I_n	0.01
Voltage high limit	PHPVOC	0.01...1.00 × U_n	0.01
Voltage low limit	PHPVOC	0.01...1.00 × U_n	0.01
Start value Mult	PHPVOC	0.8...10.0	0.1
Time multiplier	PHPVOC	0.05...15.00	0.01
Operating curve type [92]	PHPVOC	Definite or inverse time Curve type: 1, 2, 3, 4, 5, 6, 7, 8, 9, 10, 11, 12, 13, 14, 15, 17, 18, 19	
Operate delay time	PHPVOC	40...200000 ms	10

23.24.65 Accidental energization protection (GAEPVOC)

Table 98: Accidental energization protection (GAEPVOC)

Characteristic	Value
Operation accuracy	Depending on the frequency of the measured current and voltages: f_n ±2 Hz
	Current: ±1.5% of the set value or ± 0.002 × I_n Voltage: ±1.5% of the set value or ±0.002 × U_n
Start time [93, 94]	Typically 20 ms
Reset time	Typically 35 ms
Reset ratio	Typically 0.96
Operate time accuracy	±1.0% of the set value or ±20 ms
Suppression of harmonics	Voltage: -50 dB at f = n × f_n, where n = 2, 3, 4, 5, … Current: No suppression

[92] For further reference, see the Operation characteristics table
[93] Results based on statistical distribution of 1000 measurements
[94] Includes the delay of the signal output contact.

23.24.66 Accidental energization protection (GAEPVOC) main settings

Table 99: Accidental energization protection (GAEPVOC) main settings

Parameter	Function	Value (Range)	Step
Start value	GAEPVOC	0.05...9.00 × I_n	0.01
Arm set voltage	GAEPVOC	0.05...1.00 × U_n	0.01
Disarm set voltage	GAEPVOC	0.50...1.50 × U_n	0.01
Operate delay time	GAEPVOC	20...300000 ms	10
Arm delay time	GAEPVOC	40...300000 ms	10
Disarm delay time	GAEPVOC	40...300000 ms	10
Operation	GAEPVOC	1 = on 5 = off	
Reset delay time	GAEPVOC	0...60000 ms	1

23.24.67 Overexcitation protection (OEPVPH)

Table 100: Overexcitation protection (OEPVPH)

Characteristic	Value
Operation accuracy	Depending on the frequency of the measured current: f_n ±2 Hz
	±3.0% of the set value
Start time [95]	Frequency change: Typically 200 ms
	Voltage change: Typically 40 ms
Reset time	Typically 40 ms
Reset ratio	Typically 0.96
Retardation time	<35 ms
Operate time accuracy in definite-time mode	±1.0% of the set value or ±20 ms
Operate time accuracy in inverse-time mode	±5.0% of the theoretical value or ±50 ms

[95] Includes the delay of the signal output contact

23.24.68 Overexcitation protection (OEPVPH) main settings

Table 101: Overexcitation protection (OEPVPH) main settings

Parameter	Function	Value (Range)	Step
Start value	OEPVPH	100...200%	1
Operating curve type [96]	OEPVPH	Definite or inverse time Curve type: 5, 15, 17, 18, 19, 20	
Time multiplier	OEPVPH	0.1...100.0	0.1
Operate delay time	OEPVPH	200...200000 ms	10
Cooling time	OEPVPH	5...10000 s	1

23.24.69 Three-phase thermal protection for feeders, cables and distribution transformers (T1PTTR)

Table 102: Three-phase thermal protection for feeders, cables and distribution transformers (T1PTTR)

Characteristic	Value
Operation accuracy	Depending on the frequency of the measured current: f_n ±2 Hz
	Current measurement: ±1.5% of the set value or ±0.002 × I_n (at currents in the range of 0.01. 4.00 × I_n)
Operate time accuracy [97]	±2.0% of the theoretical value or ±0.50 s

23.24.70 Three-phase thermal protection for feeders, cables and distribution transformers (T1PTTR) main settings

Table 103: Three-phase thermal protection for feeders, cables and distribution transformers (T1PTTR) main settings

Parameter	Function	Value (Range)	Step
Env temperature Set	T1PTTR	-50...100°C	1
Current reference	T1PTTR	0.05...4.00 × I_n	0.01
Temperature rise	T1PTTR	0.0...200.0°C	0.1
Time constant	T1PTTR	60...60000 s	1
Maximum temperature	T1PTTR	22.0...200.0°C	0.1
Alarm value	T1PTTR	20.0...150.0°C	0.1
Reclose temperature	T1PTTR	20.0...150.0°C	0.1

Table continues on the next page

[96] For further reference, see the Operation characteristics table
[97] Overload current > 1.2 × Operate level temperature

Parameter	Function	Value (Range)	Step
Current multiplier	T1PTTR	1...5	1
Initial temperature	T1PTTR	-50.0. 100.0°C	0.1

23.24.71 Three-phase thermal overload protection, two time constants (T2PTTR)

Table 104: Three-phase thermal overload protection, two time constants (T2PTTR)

Characteristic	Value
Operation accuracy	Depending on the frequency of the measured current: f_n ±2 Hz
	Current measurement: ±1.5% of the set value or ±0.002 x I_n (at currents in the range of 0.01...4.00 x I_n)
Operate time accuracy [98]	±2.0% of the theoretical value or ±0.50 s

23.24.72 Three-phase thermal overload protection, two time constants (T2PTTR) main settings

Table 105: Three-phase thermal overload protection, two time constants (T2PTTR) main settings

Parameter	Function	Value (Range)	Step
Temperature rise	T2PTTR	0.0...200.0°C	0.1
Max temperature	T2PTTR	0.0...200.0°C	0.1
Operate temperature	T2PTTR	80.0...120.0%	0.1
Short time constant	T2PTTR	6...60000 s	1
Weighting factor p	T2PTTR	0.00...1.00	0.01
Current reference	T2PTTR	0.05...4.00 × I_n	0.01
Operation	T2PTTR	1 = on 5 = off	-

23.24.73 Three-phase overload protection for shunt capacitor banks (COLPTOC)

Table 106: Three-phase overload protection for shunt capacitor banks (COLPTOC)

Characteristic	Value
Operation accuracy	Depending on the frequency of the measured current: fn ±2 Hz, and no harmonics
	5% of the set value or 0.002 × I_n

Table continues on the next page

[98] Overload current > 1.2 x Operate level temperature

Characteristic	Value
Start time for overload stage [99, 100]	Typically 75 ms
Start time for under current stage [80, 101]	Typically 26 ms
Reset time for overload and alarm stage	Typically 60 ms
Reset ratio	Typically 0.96
Operate time accuracy in definite time mode	1% of the set value or ±20 ms
Operate time accuracy in inverse time mode	10% of the theoretical value or ±20 ms
Suppression of harmonics for under current stage	DFT: -50 dB at f = n × f_n, where n = 2,3,4,5,..

23.24.74 Three-phase overload protection for shunt capacitor banks (COLPTOC) main settings

Table 107: Three-phase overload protection for shunt capacitor banks (COLPTOC) main settings

Parameter	Function	Value (Range)	Step
Start value overload	COLPTOC	0.30 1.50 × I_n	0.01
Alarm start value	COLPTOC	80...120%	1
Start value Un Cur	COLPTOC	0.10 0.70 × I_n	0.01
Time multiplier	COLPTOC	0.05...2.00	0.01
Alarm delay time	COLPTOC	500...6000000 ms	100
Un Cur delay time	COLPTOC	100...120000 ms	100

23.24.75 Current unbalance protection for shunt capacitor banks (CUBPTOC)

Table 108: Current unbalance protection for shunt capacitor banks (CUBPTOC)

Characteristic	Value
Operation accuracy	Depending on the frequency of the measured current: fn ±2 Hz
Start time [102, 103]	1.5% of the set value or 0.002 × I_n
	Typically 26 ms
Reset time	Typically 40 ms

Table continues on the next page

99 Harmonics current before fault = 0.5 × I_n, harmonics fault current 1.5 × *Start value*, results based on statistical distribution of 1000 measurements
100 Includes the delay of the signal output contact
101 Harmonics current before fault = 1.2 × I_n, harmonics fault current 0.8 × *Start value*, results based on statistical distribution of 1000 measurements
102 Fundamental frequency current = 1.0 × I_n, current before fault = 0.0 × I_n, fault current = 2.0 × *Start value* , results based on statistical distribution of 1000 measurements
103 Includes the delay of the signal output contact

Characteristic	Value
Reset ratio	Typically 0.96
Operate time accuracy in definite time mode	1% of the theoretical value or ±20 ms
Operate time accuracy in inverse definite minimum time mode	5% of the theoretical value or ±20 ms
Suppression of harmonics	DFT: -50 dB at f = n × f_n, where n = 2,3,4,5,..

23.24.76 Current unbalance protection for shunt capacitor banks (CUBPTOC) main settings

Parameter	Function	Value (Range)	Step
Alarm mode	CUBPTOC	1 = Normal 2 = Element counter	-
Start value	CUBPTOC	0.01...1.00 × I_n	0.01
Alarm start value	CUBPTOC	0.01...1.00 × I_n	0.01
Time multiplier	CUBPTOC	0.05...15.00	0.01
Operating curve type [104]	CUBPTOC	Definite or inverse time Curve type: 1, 2, 3, 4, 5, 6, 7, 8, 9, 10, 11, 12, 13, 14, 15, 17, 18, 19	
Operate delay time	CUBPTOC	50...200000 ms	10
Alarm delay time	CUBPTOC	50...200000 ms	10

23.24.77 Three-phase current unbalance protection for shunt capacitor banks (HCUBPTOC)

Table 109: Three-phase current unbalance protection for shunt capacitor banks (HCUBPTOC)

Characteristic	Value
Operation accuracy	Depending on the frequency of the measured current: f_n ±2 Hz
	1.5% of the set value or 0.002 × I_n
Start time [105, 106]	Typically 26 ms
Reset time	Typically 40 ms
Reset ratio	Typically 0.96
Operate time accuracy in definite time mode	1% of the theoretical value or ±20 ms
Operate time accuracy in IDMT mode	5% of the theoretical value or ±20 ms
Suppression of harmonics	DFT: -50 dB at f = n × fn, where n = 2,3,4,5,..

104 For further reference, see the Operating characteristics table
105 Fundamental frequency current = 1.0 × I_n, current before fault = 0.0 × I_n, fault current = 2.0 × *Start value* , results based on statistical distribution of 1000 measurements
106 Includes the delay of the signal output contact

23.24.78 Three-phase current unbalance protection for shunt capacitor banks (HCUBPTOC) main settings

Table 110: Three-phase current unbalance protection for shunt capacitor banks (HCUBPTOC) main settings

Parameter	Function	Value (Range)	Step
Start value	HCUBPTOC	0.01...1.00 × I_n	0.01
Alarm start value	HCUBPTOC	0.01...1.00 × I_n	0.01
Time multiplier	HCUBPTOC	0.05...15.00	0.01
Operating curve type [107]	HCUBPTOC	Definite or inverse time Curve type: 1, 2, 3, 4, 5, 6, 7, 8, 9, 10, 11, 12, 13, 14, 15, 17, 18, 19	
Operate delay time	HCUBPTOC	40...200000 ms	10
Alarm delay time	HCUBPTOC	40...200000 ms	10

23.24.79 Shunt capacitor bank switching resonance protection, current based (SRCPTOC)

Table 111: Shunt capacitor bank switching resonance protection, current based (SRCPTOC)

Characteristic	Value
Operation accuracy	Depending on the frequency of the measured current: f_n ±2 Hz
	Operate value accuracy: ±3% of the set value or ±0.002 × I_n (for 2nd order Harmonics) ±1.5% of the set value or ±0.002 × I_n (for 3rd order < Harmonics < 10th order) ±6% of the set value or ±0.004 × I_n (for Harmonics >= 10th order)
Reset time	Typically 45 ms or maximum 50 ms
Retardation time	Typically 0.96
Retardation time	<35 ms
Operate time accuracy in definite time mode	±1.0% of the set value or ±20 ms
Suppression of harmonics	-50 dB at f = f_n

[107] For further reference, refer to the Operating characteristics table

23.24.80 Shunt capacitor bank switching resonance protection, current based (SRCPTOC) main settings

Table 112: Shunt capacitor bank switching resonance protection, current based (SRCPTOC) main settings

Parameter	Function	Value (Range)	Step
Alarm start value	SRCPTOC	0.03. 0.50 × I_n	0.01
Start value	SRCPTOC	0.03. 0.50 × I_n	0.01
Tuning harmonic Num	SRCPTOC	1...11	1
Operate delay time	SRCPTOC	120...360000 ms	1
Alarm delay time	SRCPTOC	120...360000 ms	1

23.24.81 Compensated neutral unbalance voltage protection (CNUPTOV)

Table 113: Compensated neutral unbalance voltage protection (CNUPTOV)

Characteristic		Value
Operation accuracy		Depending on the frequency of the measured voltage: f_n ±2 Hz
		±1.5 % of the set value or ±0.002 × U_n
Start time [108, 109]	U_{Fault} = 1.1 × set *Start value*	Typically 80 ms
Reset time		Typically 40 ms
Reset ratio		Typically 0.96
Retardation time		<35 ms
Operate time accuracy		±1.0 % of the set value or ±20 ms
Suppression of harmonics		DFT: -50 dB at f = n × f_n, where n = 2, 3, 4, 5,…

23.24.82 Compensated neutral unbalance voltage protection (CNUPTOV) main settings

Table 114: Compensated neutral unbalance voltage protection (CNUPTOV) main settings

Parameter	Function	Value (Range)	Step
Start value	CNUPTOV	0.01...1.00 × U_n	0.01
Operate delay time	CNUPTOV	100...300000 ms	100

[108] *Start value* = 0.1 × U_n, Voltage before fault = 0.9 × U_n, f_n = 50 Hz, overvoltage in one phase-to-earth with nominal frequency injected from random phase angle, results based on statistical distribution of 1000 measurements

[109] Includes the delay of the signal output contact.

23.24.83 Phase voltage differential protection for shunt capacitor banks (CPHPTDV)

Table 115: Phase voltage differential protection for shunt capacitor banks (CPHPTDV)

Characteristic	Value
Operation accuracy	Depending on the frequency of the measured current: f_n ±2 Hz
	±1.5 % of the set value or ±0.004 × U_n
Start time [110,111,112]	Min 16 ms Typical 23 ms Max 31 ms
Reset time	Typically 40 ms
Reset ratio	0.96
Operate time accuracy in definite time mode	1 % of the theoretical value or ±20 ms
Operate time accuracy in inverse definite minimum time mode	10 % of the theoretical value or ±20 ms[3]
Suppression of harmonics	DFT: -50 dB at f = n × f_n, where n = 2, 3, 4, 5, …

23.24.84 Phase voltage differential protection for shunt capacitor banks (CPHPTDV) main settings

Table 116: Phase voltage differential protection for shunt capacitor banks (CPHPTDV) main settings

Parameter	Function	Values (Range)	Step
Second VT Loc	CPHPTDV	1=Bus 2=Tap	
Fuse location	CPHPTDV	1=Internal 2=External	
Start value	CPHPTDV	0.01...1.00	0.01
Alarm start value	CPHPTDV	0.01...1.00	0.01
Time multiplier	CPHPTDV	0.025...15.000	0.005
Tap ratio	CPHPTDV	2.00...98.00	0.01

Table continues on the next page

110 Second VT Loc = Bus, Start value = 0.1 × U_n, differential voltage before fault = 0.0, f_n = 50 Hz, results based on statistical distribution of 1000 measurements
111 Measured with static signal output (SSO)t
112 Start value = 0.1 × U_n, Start value multiples in range of 2.0...2.5

Parameter	Function	Values (Range)	Step
Operating curve type	CPHPTDV	5=ANSI Def. Time 15=IEC Def. Time 17=Inv. Curve A 18=Inv. Curve B 19=Inv. Curve C 20=Programmable	
Alarm delay time	CPHPTDV	40...300000	10
Operate delay time	CPHPTDV	20...300000	10

23.24.85 Directional negative-sequence overcurrent protection (DNSPDOC)

Table 117: Directional negative-sequence overcurrent protection (DNSPDOC)

Characteristic		Value		
Operation accuracy		Depending on the frequency of the current measured: f_n ±2 Hz Current: ±1.5% of the set value or ±0.002 × I_n Voltage: ±1.5% of the set value or ±0.002 × U_n Phase angle: ±2°		
Start time [113, 114]	I_{Fault} = 2 × set *Start value*	Minimum	Typical	Maximum
		33 ms	36 ms	38 ms
Reset time		Typically 40 ms		
Reset ratio		Typically 0.96		
Retardation time		<35 ms		
Operate time accuracy		±1.0% of the set value of ±20 ms		
Suppression of harmonics		RMS: No suppression DFT: -50 dB at f = n × f_n, where n = 2, 3, 4, 5,... Peak-to-Peak: No suppression		

113 Measurement mode NPS, NPS current before fault = 0.0 × I_n, f_n = 50 Hz, fault NPS current with nominal frequency injected from random phase angle, results based on statistical distribution of 1000 measurements.

114 Includes the delay of the signal output contact.

23.24.86 Directional negative-sequence overcurrent protection (DNSPDOC) main settings

Table 118: Directional negative-sequence overcurrent protection (DNSPDOC) main settings

Parameter	Function	Value (Range)	Step
Start value	DNSPDOC	0.05...5.00 × I_n	0.01
Directional mode	DNSPDOC	1 = Non-directional 2 = Forward 3 = Reverse	-
Operate delay time	DNSPDOC	40...300000 ms	10
Characteristic angle	DNSPDOC	-179...180°	1

23.24.87 Low-voltage ride-through protection (LVRTPTUV)

Table 119: Low-voltage ride-through protection (LVRTPTUV)

Characteristic	Value
Operation accuracy	Depending on the frequency of the measured voltage: f_n ±2 Hz
	±1.5% of the set value or ±0.002 × U_n
Start time [115, 116]	Typically 40 ms
Reset time	Based on maximum value of *Recovery time* setting
Operate time accuracy	±1.0% of the set value or ±20 ms
Suppression of harmonics	DFT: -50 dB at f = n × f_n, where n = 2, 3, 4, 5,...

23.24.88 Low-voltage ride-through protection (LVRTPTUV) main settings

Table 120: Low-voltage ride-through protection (LVRTPTUV) main settings

Parameter	Function	Value (Range)	Step
Voltage start value	LVRTPTUV	0.05. 1.20 × U_n	0.01
Num of start phases	LVRTPTUV	4 = Exactly 1 of 3 5 = Exactly 2 of 3 6 = Exactly 3 of 3	-
Voltage selection	LVRTPTUV	1 = Highest Ph-to-E 2 = Lowest Ph-to-E 3 = Highest Ph-to-Ph 4 = Lowest Ph-to-Ph 5 = Positive Seq	-

Table continues on the next page

115 Tested for *Number of Start phases* = 1 out of 3, results based on statistical distribution of 1000 measurements

116 Includes the delay of the signal output contact

Parameter	Function	Value (Range)	Step
Active coordinates	LVRTPTUV	1...10	1
Voltage level 1	LVRTPTUV	0.00 1.20 xU_n	0.01
Voltage level 2	LVRTPTUV	0.00 1.20 xU_n	0.01
Voltage level 3	LVRTPTUV	0.00 1.20 xU_n	0.01
Voltage level 4	LVRTPTUV	0.00 1.20 xU_n	0.01
Voltage level 5	LVRTPTUV	0.00 1.20 xU_n	0.01
Voltage level 6	LVRTPTUV	0.00 1.20 xU_n	0.01
Voltage level 7	LVRTPTUV	0.00 1.20 xU_n	0.01
Voltage level 8	LVRTPTUV	0.00 1.20 xU_n	0.01
Voltage level 9	LVRTPTUV	0.00 1.20 xU_n	0.01
Voltage level 10	LVRTPTUV	0.00 1.20 xU_n	0.01
Recovery time 1	LVRTPTUV	0...300000 ms	1
Recovery time 2	LVRTPTUV	0...300000 ms	1
Recovery time 3	LVRTPTUV	0...300000 ms	1
Recovery time 4	LVRTPTUV	0...300000 ms	1
Recovery time 5	LVRTPTUV	0...300000 ms	1
Recovery time 6	LVRTPTUV	0...300000 ms	1
Recovery time 7	LVRTPTUV	0...300000 ms	1
Recovery time 8	LVRTPTUV	0...300000 ms	1
Recovery time 9	LVRTPTUV	0...300000 ms	1
Recovery time 10	LVRTPTUV	0...300000 ms	1

23.24.89 Voltage vector shift protection (VVSPPAM)

Table 121: Voltage vector shift protection (VVSPPAM)

Characteristic	Value
Operation accuracy	Depending on the frequency of the measured voltage: f_n ±1 Hz
	±1°
Operate time [117, 118]	Typically 53 ms

[117] f_n = 50 Hz, results based on statistical distribution of 1000 measurements
[118] Includes the delay of the signal output contact

23.24.90 Voltage vector shift protection (VVSPPAM) main settings

Table 122: Voltage vector shift protection (VVSPPAM) main settings

Parameter	Function	Value (Range)	Step
Start value	VVSPPAM	2.0...30.0°	0.1
Over Volt Blk value	VVSPPAM	0.40 1.50 × U_n	0.01
Under Volt Blk value	VVSPPAM	0.15. 1.00 × U_n	0.01
Phase supervision	VVSPPAM	7 = Ph A + B + C 8 = Pos sequence	-

23.24.91 Directional reactive power undervoltage protection (DQPTUV)

Table 123: Directional reactive power undervoltage protection (DQPTUV)

Characteristic	Value
Operation accuracy	Depending on the frequency of the measured current and voltage: f_n ±2 Hz Reactive power range |PF| <0.71
	Power: ±3.0% or ±0.002 × Q_n Voltage: ±1.5% of the set value or ±0.002 × U_n
Start time [119, 120]	Typically 46 ms
Reset time	<50 ms
Reset ratio	Typically 0.96
Operate time accuracy	±1.0% of the set value or ±20 ms
Suppression of harmonics	DFT: -50 dB at f = n × f_n, where n = 2, 3, 4, 5,...

23.24.92 Directional reactive power undervoltage protection (DQPTUV) main settings

Table 124: Directional reactive power undervoltage protection (DQPTUV) main settings

Parameter	Function	Value (Range)	Step
Voltage start value	DQPTUV	0.20 1.20 × U_n	0.01
Operate delay time	DQPTUV	100...300000 ms	10
Min reactive power	DQPTUV	0.01. 0.50 × S_n	0.01
Min Ps Seq current	DQPTUV	0.02. 0.20 × I_n	0.01
Pwr sector reduction	DQPTUV	0...10°	1

119 *Start value* = 0.05 × S_n, reactive power before fault = 0.8 × *Start value*, reactive power overshoot 2 times, results based on statistical distribution of 1000 measurements

120 Includes the delay of the signal output contact

23.24.93 Reverse power/directional overpower protection (DOPPDPR)

Table 125: Reverse power/directional overpower protection (DOPPDPR)

Characteristic	Value
Operation accuracy [121]	Depending on the frequency of the measured current and voltage: $f = f_n \pm 2$ Hz
	Power measurement accuracy ±3% of the set value or ±0.002 × S_n Phase angle: ±2°
Start time [122, 123]	Typically 45 ms
Reset time	Typically 30 ms
Reset ratio	Typically 0.94
Operate time accuracy	±1.0% of the set value of ±20 ms
Suppression of harmonics	-50 dB at f = n × f_n, where n = 2, 3, 4, 5,…

23.24.94 Reverse power/directional overpower protection (DOPPDPR) main settings

Table 126: Reverse power/directional overpower protection (DOPPDPR) main settings

Parameter	Function	Value (Range)	Step
Start value	DOPPDPR	0.01...2.00 × S_n	0.01
Operate delay time	DOPPDPR	40...300000 ms	10
Directional mode	DOPPDPR	2 = Forward 3 = Reverse	-
Power angle	DOPPDPR	-90...90°	1

121 *Measurement mode* = “Pos Seq” (default)
122 U = U_n, f_n = 50 Hz, results based on statistical distribution of 1000 measurements
123 Includes the delay of the signal output contact

23.24.95 Underpower protection (DUPPDPR)

Table 127: Underpower protection (DUPPDPR)

Characteristic	Value
Operation accuracy [124]	Depending on the frequency of the measured current and voltage: f_n ±2 Hz
	Power measurement accuracy ±3% of the set value or ±0.002 × S_n Phase angle: ±2°
Start time [125, 126]	Typically 45 ms
Reset time	Typically 30 ms
Reset ratio	Typically 1.04
Operate time accuracy	±1.0% of the set value of ±20 ms
Suppression of harmonics	-50 dB at f = n × f_n, where n = 2, 3, 4, 5,…

23.24.96 Underpower protection (DUPPDPR) main settings

Table 128: Underpower protection (DUPPDPR) main settings

Parameter	Function	Value (Range)	Step
Start value	DUPPDPR	0.01. 2.00 × S_n	0.01
Operate delay time	DUPPDPR	40...300000 ms	10
Pol reversal	DUPPDPR	0 = False 1 = True	-
Disable time	DUPPDPR	0...60000 ms	1000

23.24.97 Three-phase underimpedance protection (UZPDIS)

Table 129: Three-phase underimpedance protection (UZPDIS)

Characteristic	Value
Operation accuracy	Depending on the frequency of the measured current and voltage: f_n ±2 Hz
	±3.0% of the set value or ±0.2 %Zb
Start time [127, 128]	Typically 50 ms
Reset time	Typically 40 ms
Reset ratio	Typically 1.04
Retardation time	<40 ms
Operate time accuracy	±1.0% of the set value or ±20 ms

124 *Measurement mode* = “Pos Seq” (default)
125 U = U_n, f_n = 50 Hz, results based on statistical distribution of 1000 measurements
126 Includes the delay of the signal output contact
127 f_n = 50 Hz, results based on statistical distribution of 1000 measurements
128 Includes the delay of the signal output contact

23.24.98 Three-phase underimpedance protection (UZPDIS) main settings

Table 130: Three-phase underimpedance protection (UZPDIS) main settings

Parameter	Function	Value (Range)	Step
Percentage reach	UZPDIS	1...6000% Z_n	1
Operate delay time	UZPDIS	40...200000 ms	10

23.24.99 Three-phase underexcitation protection (UEXPDIS)

Table 131: Three-phase underexcitation protection (UEXPDIS)

Characteristic	Value
Operation accuracy	Depending on the frequency of the measured current and voltage: $f = f_n \pm 2$ Hz
	±3.0% of the set value or ±0.2% Zb
Start time [129, 130]	Typically 45 ms
Reset time	Typically 30 ms
Reset ratio	Typically 1.04
Retardation time	Total retardation time when the impedance returns from the operating circle <40 ms
Operate time accuracy	±1.0% of the set value or ±20 ms
Suppression of harmonics	-50 dB at $f = n \times f_n$, where n = 2, 3, 4, 5,…

23.24.100 Three-phase underexcitation protection (UEXPDIS) main settings

Table 132: Three-phase underexcitation protection (UEXPDIS) main settings

Parameter	Function	Value (Range)	Step
Diameter	UEXPDIS	1...6000 %Z_n	1
Offset	UEXPDIS	-1000...1000 %Z_n	1
Displacement	UEXPDIS	-1000...1000 %Z_n	1
Operate delay time	UEXPDIS	60...200000 ms	10
External Los Det Ena	UEXPDIS	0 = Disable 1 = Enable	-

[129] f_n= 50Hz, results based on statistical distribution of 1000 measurements
[130] Includes the delay of the signal output contact

23.24.101 Third harmonic-based stator earth-fault protection (H3EFPSEF)

Table 133: Third harmonic-based stator earth-fault protection (H3EFPSEF)

Characteristic	Value
Operation accuracy	Depending on the frequency of the measured voltage: f_n ±2 Hz
	±5% of the set value or ±0.004 × U_n
Start time [131, 132]	Typically 35 ms
Reset time	Typically 35 ms
Reset ratio	Typically 0.96 (differential mode) Typically 1.04 (under voltage mode)
Operate time accuracy	±1.0% of the set value of ±20 ms

23.24.102 Third harmonic-based stator earth-fault protection (H3EFPSEF) main settings

Table 134: Third harmonic-based stator earth-fault protection (H3EFPSEF) main settings

Parameter	Function	Value (Range)	Step
Beta	H3EFPSEF	0.50...10.00	0.01
Voltage N 3.H Lim	H3EFPSEF	0.005. 0.200 × U_n	0.001
Operate delay time	H3EFPSEF	20...300000 ms	10
Voltage selection	H3EFPSEF	1 = No voltage 2 = Measured Uo 3 = Calculated Uo 4 = Phase A 5 = Phase B 6 = Phase C	-
CB open factor	H3EFPSEF	1.00...10.00	0.01

23.24.103 Rotor earth-fault protection, injection method (MREFPTOC)

Table 135: Rotor earth-fault protection, injection method (MREFPTOC)

Characteristic	Value
Operation accuracy	Depending on the frequency of the current measured: f_n ±2 Hz
	±1.5% of the set value or ±0.002 × I_n

Table continues on the next page

[131] f_n = 50 Hz, results based on statistical distribution of 1000 measurements
[132] Includes the delay of the signal output contact

Characteristic		Value		
Start time [133, 134]	I_{Fault} = 1.2 × set *Start value*	Minimum	Typical	Maximum
		30 ms	34 ms	38 ms
Reset time		<50 ms		
Reset ratio		Typically 0.96		
Retardation time		<50 ms		
Operate time accuracy		±1.0% of the set value of ±20 ms		
Suppression of harmonics		-50 dB at f = n × fn, where n = 2, 3, 4, 5,…		

23.24.104 Rotor earth-fault protection, injection method (MREFPTOC) main settings

Table 136: Rotor earth-fault protection, injection method (MREFPTOC) main settings

Parameter	Function	Value (Range)	Step
Operate start value	MREFPTOC	0.010...2.000 × I_n	0.001
Alarm start value	MREFPTOC	0.010...2.000 × I_n	0.001
Operate delay time	MREFPTOC	40...20000 ms	1
Alarm delay time	MREFPTOC	40...200000 ms	1

23.24.105 High-impedance or flux-balance based differential protection (MHZPDIF)

Table 137: High-impedance or flux-balance based differential protection (MHZPDIF)

Characteristic		Value		
Operation accuracy		Depending on the frequency of the measured current: f_n ±2 Hz		
		±1.5% of the set value or 0.002 × I_n		
Start time [135, 136]	I_{Fault} = 2.0 × set *Start Value* (one phase fault)	Minimum	Typical	Maximum
		13 ms	17 ms	21 ms
	I_{Fault} = 2.0 × set *Start Value* (three phases fault)	11 ms	14 ms	17 ms
Reset time		<40 ms		

Table continues on the next page

133 Current before fault = 0.0 × I_n, f_n = 50 Hz, earth-fault current with nominal frequency injected from random phase angle, results based on statistical distribution of 1000 measurements
134 Includes the delay of the signal output contact
135 Measurement mode = “Peak-to-Peak”, current before fault = 0.0 × I_n, f_n = 50 Hz, fault current with nominal frequency injected from random phase angle, results based on statistical distribution of 1000 measurements
136 Includes the delay of the signal output contact

Characteristic	Value
Reset ratio	Typically 0.96
Retardation time	<35 ms
Operate time accuracy in definite time mode	±1.0% of the set value of ±20 ms

23.24.106 High-impedance or flux-balance based differential protection (MHZPDIF) main settings

Table 138: High-impedance or flux-balance based differential protection (MHZPDIF) main settings

Parameter	Function	Value (Range)	Step
Operate value	MHZPDIF	0.5...50.0 %I_n	0.1
Minimum operate time	MHZPDIF	20...300000 ms	10

23.24.107 Cable end protection (CEPNDF)

Table 139: Cable end protection (CEPNDF)

Characteristic	Value
Operation accuracy	Depending on the frequency of the measured current: f_n ±2 Hz
	±2.5% of the set value or ±0.004 x I_n
Start time [137,138]	Typically 40 ms I Fault = 2.0 × set *Start value*
Reset time	Typically 40 ms
Reset ratio	Typically 0.96
Retardation time	<35 ms
Operate time accuracy in definite time mode	±1.0% of the set value or ±20 ms
Suppression of harmonics	DFT: -50 dB at f = n × f_n, where n = 2, 3, 4, 5, …

23.24.108 Cable end protection (CEPNDF) main settings

Table 140: Cable end protection (CEPNDF) main settings

Parameter	Function	Values (Range)	Step
Start value	CEPNDF	5.0...50.0	1.0
Voltage start value	CEPNDF	0.010...1.000	0.001

Table continues on the next page

137 Current before fault = 0.0, f_n = 50 Hz, results based on statistical distribution of 1000 measurements

138 Includes the delay of the signal output contact

Parameter	Function	Values (Range)	Step
Enable voltage limit	CEPNDF	0=False 1=True	
Operate delay time	CEPNDF	40...300000	1

23.24.109 Distance protection (DSTPDIS)

Table 141: Distance protection (DSTPDIS)

Characteristic	Value
Operation accuracy	At the frequency f = f_n Current: ±1.5% of the set value or ±0.002 × I_n Voltage: ±1.5% of the set value or ±0.002 × U_n Impedance: ±2.5% of the set value or ±0.05 Ω Phase angle: ±2°
Shortest operate time [139] SIR [140]: 0.1...50	24 ms
Transient overreach SIR = 0.1...50	<8.5%
Reset time	Typically 45 ms
Reset ratio	Typically 0.96/1.04
Operate time accuracy	±1.0% of the set value or ±20 ms

23.24.110 Distance protection (DSTPDIS) main settings

Table 142: Distance protection (DSTPDIS) main settings

Parameter	Function	Value (Range)	Step
Phase Sel mode GFC	DSTPDIS	1 = Overcurrent 2 = Vol Dep Overcur 3 = Under impedance 4 = OC AND Und impedance	-
EF detection Mod GFC	DSTPDIS	1 = Io 2 = Io OR Uo 3 = Io AND Uo 4 = Io AND IoRef	-

Table continues on the next page

139 Tested according to IEC 60255-121 Long line model, SIR = 0.2.
140 SIR = Source impedance ratio

Parameter	Function	Value (Range)	Step
Operate delay GFC	DSTPDIS	100...60000 ms	10
Z Chr Mod Ph Sel GFC	DSTPDIS	1 = Quadrilateral 2 = Mho (circular)	-
Directional mode Zn1	DSTPDIS	2 = Forward 3 = Reverse 1 = Non-directional	-
R1 zone 1	DSTPDIS	0.00...3000.00 Ω	0.01
X1 zone 1	DSTPDIS	0.00...3000.00 Ω	0.01
X1 reverse zone 1	DSTPDIS	0.00...3000.00 Ω	0.01
Z1 zone 1	DSTPDIS	0.01...3000.00 Ω	0.01
Z1 angle zone 1	DSTPDIS	15.0...90.0°	0.1
Z1 reverse zone 1	DSTPDIS	0.00...3000.00 Ω	0.01
PP operate delay Zn1	DSTPDIS	20...60000 ms	1
R0 zone 1	DSTPDIS	0.00...3000.00 Ω	0.01
X0 zone 1	DSTPDIS	0.00...3000.00 Ω	0.01
Factor K0 zone 1	DSTPDIS	0.00…5.00	0.01
Factor K0 angle Zn1	DSTPDIS	-179...180°	1
Gnd operate Dl Zn1	DSTPDIS	20...60000 ms	1
Directional mode Zn2	DSTPDIS	1 = Non-directional 2 = Forward 3 = Reverse	-
R1 zone 2	DSTPDIS	0.00...3000.00 Ω	0.01
X1 zone 2	DSTPDIS	0.00...3000.00 Ω	0.01
X1 reverse zone 2	DSTPDIS	0.00...3000.00 Ω	0.01
Z1 zone 2	DSTPDIS	0.01...3000.00 Ω	0.01
Z1 angle zone 2	DSTPDIS	15.0...90.0°	0.1
Z1 reverse zone 2	DSTPDIS	0.00...3000.00 Ω	0.01
PP Op delay Mod Zn2	DSTPDIS	20...60000 ms	1
R0 zone 2	DSTPDIS	0.00...3000.00 Ω	0.01
X0 zone 2	DSTPDIS	0.00...3000.00 Ω	0.01

Table continues on the next page

Parameter	Function	Value (Range)	Step
Factor K0 zone 2	DSTPDIS	0.00…5.00	0.01
Factor K0 angle Zn2	DSTPDIS	-179...180°	1
Gnd operate Dl Zn2	DSTPDIS	20...60000 ms	1
Directional mode Zn3	DSTPDIS	1 = Non-directional 2 = Forward 3 = Reverse	-
R1 zone 3	DSTPDIS	0.00...3000.00 Ω	0.01
X1 zone 3	DSTPDIS	0.00...3000.00 Ω	0.01
X1 reverse zone 3	DSTPDIS	0.00...3000.00 Ω	0.01
Z1 zone 3	DSTPDIS	0.01...3000.00 Ω	0.01
Z1 angle zone 3	DSTPDIS	15.0...90.0°	0.1
Z1 reverse zone 3	DSTPDIS	0.00...3000.00 Ω	0.01
PP operate delay Zn3	DSTPDIS	20...60000 ms	1
R0 zone 3	DSTPDIS	0.00...3000.00 Ω	0.01
X0 zone 3	DSTPDIS	0.00...3000.00 Ω	0.01
Factor K0 zone 3	DSTPDIS	0.00…5.00	0.01
Factor K0 angle Zn3	DSTPDIS	-179...180°	1
Gnd operate Dl Zn3	DSTPDIS	20...60000 ms	1
Directional mode Zn4	DSTPDIS	1 = Non-directional 2 = Forward 3 = Reverse	-
R1 zone 4	DSTPDIS	0.00...3000.00 Ω	0.01
X1 zone 4	DSTPDIS	0.00...3000.00 Ω	0.01
X1 reverse zone 4	DSTPDIS	0.00...3000.00 Ω	0.01
Z1 zone 4	DSTPDIS	0.01...3000.00 Ω	0.01
Z1 angle zone 4	DSTPDIS	15.0...90.0°	0.1
Z1 reverse zone 4	DSTPDIS	0.00...3000.00 Ω	0.01
PP operate delay Zn4	DSTPDIS	20...60000 ms	1
R0 zone 4	DSTPDIS	0.00...3000.00 Ω	0.01

Table continues on the next page

Parameter	Function	Value (Range)	Step
X0 zone 4	DSTPDIS	0.00...3000.00 Ω	0.01
Factor K0 zone 4	DSTPDIS	0.00…5.00	0.01
Factor K0 angle Zn4	DSTPDIS	-179...180°	1
Gnd operate Dl Zn4	DSTPDIS	20...60000 ms	1
Directional mode Zn5	DSTPDIS	1 = Non-directional 2 = Forward 3 = Reverse	-
R1 zone 5	DSTPDIS	0.00...3000.00 Ω	0.01
X1 zone 5	DSTPDIS	0.00...3000.00 Ω	0.01
X1 reverse zone 5	DSTPDIS	0.00...3000.00 Ω	0.01
Z1 zone 5	DSTPDIS	0.01...3000.00 Ω	0.01
Z1 angle zone 5	DSTPDIS	15.0...90.0°	0.1
Z1 reverse zone 5	DSTPDIS	0.00...3000.00 Ω	0.01
PP operate delay Zn5	DSTPDIS	20...60000 ms	1
R0 zone 5	DSTPDIS	0.00...3000.00 Ω	0.01
X0 zone 5	DSTPDIS	0.00...3000.00 Ω	0.01
Factor K0 zone 5	DSTPDIS	0.00…5.00	0.01
Factor K0 angle Zn5	DSTPDIS	-179...180°	1
Gnd operate Dl Zn5	DSTPDIS	20...60000 ms	1
Select active zones	DSTPDIS	1 = Zone 1 2 = Zones 1-2 3 = Zones 1-3 4 = Zones 1-4 5 = All 5 zones	-

23.24.111 Local acceleration logic (DSTPLAL)

Table 143: Local acceleration logic (DSTPLAL)

Characteristic	Value
Operation accuracy	At the frequency f = f_n
	±1.5% of the set value or ±0.002 × I_n

Table continues on the next page

Characteristic	Value
Operate time accuracy	±1.0% of the set value or ±20 ms
Suppression of harmonics	DFT: -50 dB at f = n × f_n, where n = 2, 3, 4, 5,…

23.24.112 Local acceleration logic (DSTPLAL) main settings

Table 144: Local acceleration logic (DSTPLAL) main settings

Parameter	Function	Value (Range)	Step
Load current value	DSTPLAL	0.01...1.00 × I_n	0.01
Minimum current	DSTPLAL	0.01...1.00 × I_n	0.01
Load release off Tm	DSTPLAL	0...60000 ms	10
Minimum current time	DSTPLAL	0...60000 ms	10
Operation mode	DSTPLAL	1 = Zone extension 2 = Loss of load 3 = Both	-
Load release on time	DSTPLAL	0...60000 ms	10

23.24.113 Scheme communication logic (DSOCPSCH)

Table 145: Scheme communication logic (DSOCPSCH)

Characteristic	Value
Operate time accuracy	±1.0% of the set value or ±20 ms

23.24.114 Scheme communication logic (DSOCPSCH) main settings

Table 146: Scheme communication logic (DSOCPSCH) main settings

Parameter	Function	Value (Range)	Step
Scheme type	DSOCPSCH	1 = None 2 = Intertrip 3 = Permissive Underreach 4 = Permissive Overreach 5 = Blocking	-
Carrier Min Dur	DSOCPSCH	0...60000 ms	1
Coordination Time	DSOCPSCH	0...60000 ms	1

23.24.115 Current reversal and weak-end infeed logic (CRWPSCH)

Table 147: Current reversal and weak-end infeed logic (CRWPSCH)

Characteristic	Value
Operation accuracy	At the frequency f = f_n ±1.5% of the set value or ±0.002 × U_n
Operate time accuracy	±1.0% of the set value or ±20 ms

23.24.116 Current reversal and weak-end infeed logic (CRWPSCH) main settings

Table 148: Current reversal and weak-end infeed logic (CRWPSCH) main settings

Parameter	Function	Value (Range)	Step
Reversal mode	CRWPSCH	1 = Off 2 = On	-
Wei mode	CRWPSCH	1 = Off 3 = Echo 4 = Echo and Operate	-
PhV level for Wei	CRWPSCH	0.10...0.90 × U_n	0.01
PPV level for Wei	CRWPSCH	0.10...0.90 × U_n	0.01
Reversal time	CRWPSCH	0...60000 ms	10
Reversal reset time	CRWPSCH	0...60000 ms	10
Wei Crd time	CRWPSCH	0...60000 ms	10

23.24.117 Communication logic for residual overcurrent (RESCPSCH)

Table 149: Communication logic for residual overcurrent (RESCPSCH)

Characteristic	Value
Operate time accuracy	±1.0% of the set value or ±20 ms

23.24.118 Communication logic for residual overcurrent (RESCPSCH) main settings

Table 150: Communication logic for residual overcurrent (RESCPSCH) main settings

Parameter	Function	Value (Range)	Step
Scheme type	RESCPSCH	1 = None 2 = Intertrip 3 = Permissive Underreach 4 = Permissive Overreach 5 = Blocking	-
Carrier Min Dur	RESCPSCH	0...60000 ms	1
Coordination time	RESCPSCH	0...60000 ms	1

23.24.119 Current reversal and weak-end infeed logic for residual overcurrent (RCRWPSCH)

Table 151: Current reversal and weak-end infeed logic for residual overcurrent (RCRWPSCH)

Characteristic	Value
Operation accuracy	At the frequency f = f_n ±1.5% of the set value or ±0.002 × I_n
Operate time accuracy	±1.0% of the set value or ±20 ms

23.24.120 Current reversal and weak-end infeed logic for residual overcurrent (RCRWPSCH) main settings

Table 152: Current reversal and weak-end infeed logic for residual overcurrent (RCRWPSCH) main settings

Parameter	Function	Value (Range)	Step
Reversal mode	RCRWPSCH	1 = Off 2 = On	-
Wei mode	RCRWPSCH	1 = Off 3 = Echo 4 = Echo and Operate	-
Residual voltage Val	RCRWPSCH	0.05...0.70 × U_n	0.01
Reversal time	RCRWPSCH	0...60000 ms	10
Reversal reset time	RCRWPSCH	0...60000 ms	10
Wei Crd time	RCRWPSCH	0...60000 ms	10

23.24.121 Faulty phase supervision for earth fault (FPHRPHS) main settings

Table 153: Faulty phase supervision for earth fault (FPHRPHS) main settings

Parameter	Function	Value (Range)	Step
Phase indication mode	FPHRPHS	5=Current delta 6=Cur AND Vol delta	-

23.24.122 Out-of-step protection with double blinders (OOSRPSB)

Table 154: Out-of-step protection with double blinders (OOSRPSB)

Characteristic	Value
Impedance reach	Depending on the frequency of the measured current and voltage: f_n ±2 Hz
	±3.0% of the reach value or ±0.2% of $U_n/(\sqrt{3} * I_n)$
Reset time	±1.0% of the set value or ±40 ms
Operate time accuracy	±1.0% of the set value or ±20 ms
Suppression of harmonics	DFT: -50 dB at f = n × f_n, where n = 2, 3, 4, 5...

23.24.123 Out-of-step protection (OOSRPSB) main settings

Table 155: Out-of-step protection (OOSRPSB) main settings

Parameter	Function	Value (Range)	Step
Oos operate mode	OOSRPSB	1 = Way in 2 = Way out 2 = Way out 3 = Adaptive	-
Forward reach	OOSRPSB	0.00...6000.00 Ω	0.01
Reverse reach	OOSRPSB	0.00...6000.00 Ω	0.01
Inner blinder R	OOSRPSB	1.00...6000.00 Ω	0.01
Outer blinder R	OOSRPSB	1.01...10000.00 Ω	0.01
Impedance angle	OOSRPSB	10.0...90.0°	0.1
Swing time	OOSRPSB	20...300000 ms	10
Zone 1 reach	OOSRPSB	1...100%	1
Operate delay time	OOSRPSB	20...60000 ms	10

23.24.124 Negative-sequence overcurrent protection for machines (MNSPTOC)

Table 156: Negative-sequence overcurrent protection for machines (MNSPTOC)

Characteristic		Value		
Operation accuracy		Depending on the frequency of the measured current: f_n		
		±1.5% of the set value or ±0.002 × I_n		
Start time [141, 142]		Minimum	Typical	Maximum
	I_{Fault} = 2.0 × set *Start value*	23	25 ms	28 ms
Reset time		Typically 40 ms		
Reset ratio		Typically 0.96		
Retardation time		<35 ms		
Operate time accuracy in definite time mode		±1.0% of the set value or ±20 ms		
Operate time accuracy in inverse time mode		±5.0% of the theoretical value or ±20 ms [143]		
Suppression of harmonics		DFT: -50 dB at f = n × f_n, where n = 2, 3, 4, 5,…		

23.24.125 Negative-sequence overcurrent protection for machines (MNSPTOC) main settings

Table 157: Negative-sequence overcurrent protection for machines (MNSPTOC) main settings

Parameter	Function	Value (Range)	Step
Start value	MNSPTOC	0.01. 0.50 × I_n	0.01
Operating curve type	MNSPTOC	Definite or inverse time Curve type: 5, 15, 17, 18	
Operate delay time	MNSPTOC	100...120000 ms	10
Operation	MNSPTOC	1 = on 5 = off	-
Cooling time	MNSPTOC	5...7200 s	1

23.24.126 Loss of phase, undercurrent (PHPTUC)

Table 158: Loss of phase, undercurrent (PHPTUC)

Characteristic	Value
Operation accuracy	Depending on the frequency of the measured current: f_n ±2 Hz
	±1.5% of the set value or ±0.002 × I_n
Start time	Typically <55 ms
Reset time	<40 ms

Table continues on the next page

141 Negative-sequence current before = 0.0, f_n = 50 Hz, results based on statistical distribution of 1000 measurements
142 Includes the delay of the signal output contact
143 *Start value* multiples in range of 1.10...5.00

Characteristic	Value
Reset ratio	Typically 1.04
Retardation time	<35 ms
Operate time accuracy in definite time mode	mode ±1.0% of the set value or ±20 ms

23.24.127 Loss of phase, undercurrent (PHPTUC) main settings

Table 159: Loss of phase, undercurrent (PHPTUC) main settings

Parameter	Function	Value (Range)	Step
Current block value	PHPTUC	0.00...0.50 × I_n	0.01
Start value	PHPTUC	0.01...1.00 × I_n	0.01
Operate delay time	PHPTUC	50...200000 ms	10

23.24.128 Loss of load supervision (LOFLPTUC)

Table 160: Loss of load supervision (LOFLPTUC)

Characteristic	Value
Operation accuracy	Depending on the frequency of the measured current: f_n ±2 Hz
	±1.5% of the set value or ±0.002 × I_n
Start time	Typically 300 ms
Reset time	Typically 40 ms
Reset ratio	Typically 1.04
Retardation time	<35 ms
Operate time accuracy in definite time mode	±1.0% of the set value or ±20 ms

23.24.129 Loss of load supervision (LOFLPTUC) main settings

Table 161: Loss of load supervision (LOFLPTUC) main settings

Parameter	Function	Value (Range)	Step
Start value low	LOFLPTUC	0.01. 0.50 × I n	0.01
Start value high	LOFLPTUC	0.01. 1.00 × I n	0.01
Operate delay time	LOFLPTUC	400...600000 ms	10
Operation	LOFLPTUC	1 = on 5 = off	-

23.24.130 Motor load jam protection (JAMPTOC)

Table 162: Motor load jam protection (JAMPTOC)

Characteristic	Value
Operation accuracy	Depending on the frequency of the measured current: f_n ±2 Hz
	±1.5% of the set value or ±0.002 × I_n
Reset time	Typically 40 ms
Reset ratio	Typically 0.96
Retardation time	<35 ms
Operate time accuracy in definite time mode	±1.0% of the set value or ±20 ms

23.24.131 Motor load jam protection (JAMPTOC) main settings

Table 163: Motor load jam protection (JAMPTOC) main settings

Parameter	Function	Value (Range)	Step
Operation	JAMPTOC	1 = on 5 = off	-
Start value	JAMPTOC	0.10...10.00 × I_n	0.01
Operate delay time	JAMPTOC	100...120000 ms	10

23.24.132 Motor start-up supervision (STTPMSU)

Table 164: Motor start-up supervision (STTPMSU)

Characteristic		Value		
Operation accuracy		Depending on the frequency of the measured current: f_n ±2 Hz		
		±1.5% of the set value or ±0.002 × I_n		
Start time [144, 145]		Minimum	Typical	Maximum
	I_{Fault} = 1.1 × set *Start detection A*	27 ms	30 ms	34 ms
Operate time accuracy		±1.0% of the set value or ±20 ms		
Reset ratio		Typically 0.90		

144 Current before = 0.0 × I_n, f_n = 50 Hz, overcurrent in one phase, results based on statistical distribution of 1000 measurements

145 Includes the delay of the signal output contact

23.24.133 Motor start-up supervision (STTPMSU) main settings

Table 165: Motor start-up supervision (STTPMSU) main settings

Parameter	Function	Value (Range)	Step
Motor start-up A	STTPMSU	1.0 10.0 × I_n	0.1
Motor start-up time	STTPMSU	1...80 s	1
Lock rotor time	STTPMSU	2...120 s	1
Operation	STTPMSU	1 = on 5 = off	-
Operation mode	STTPMSU	1 = IIt 2 = IIt, CB 3 = IIt + stall 4 = IIt + stall, CB	-
Restart inhibit time	STTPMSU	0...250 min	1

23.24.134 MSCPMRI Group settings (Basic)

Table 166: MSCPMRI Group settings (Basic)

Parameter	Function	Value (Range)	Step
Warm start level	MSCPMRI	20.0...100.0%	0.1
Max Num cold start	MSCPMRI	1...10	1
Max Num warm start	MSCPMRI	1...10	1

23.24.135 Phase reversal protection (PREVPTOC)

Table 167: Phase reversal protection (PREVPTOC)

Characteristic		Value		
Operation accuracy		Depending on the frequency of the measured current: f_n ±2 Hz		
		±1.5% of the set value or ±0.002 × I_n		
Start time [146, 147]		Minimum	Typical	Maximum
	I_{Fault} = 2.0 × set *Start value*	23 ms	25 ms	28 ms
Reset time		Typically 40 ms		
Reset ratio		Typically 0.96		
Retardation time		<35 ms		
Operate time accuracy in definite time mode		±1.0% of the set value or ±20 ms		
Suppression of harmonics		DFT: -50 dB at f = n × f_n, where n = 2, 3, 4, 5,...		

146 Negative-sequence current before = 0.0, f_n = 50 Hz, results based on statistical distribution of 1000 measurements

147 Includes the delay of the signal output contact

23.24.136 Phase reversal protection (PREVPTOC) main settings

Table 168: Phase reversal protection (PREVPTOC) main settings

Parameter	Function	Value (Range)	Step
Start value	PREVPTOC	0.05. 1.00 x I_n	0.01
Operate delay time	PREVPTOC	100...60000 ms	10
Operation	PREVPTOC	1 = on 5 = off	-

23.24.137 Thermal overload protection for motors (MPTTR)

Table 169: Thermal overload protection for motors (MPTTR)

Characteristic	Value
Operation accuracy	Depending on the frequency of the measured current: f_n ±2 Hz
	Current measurement: ±1.5% of the set value or ±0.002 × I_n (at currents in the range of 0.01...4.00 × I_n)
Operate time accuracy [148, 149]	±2.0% of the theoretical value or ±0.50 s

23.24.138 Thermal overload protection for motors (MPTTR) main settings

Table 170: Thermal overload protection for motors (MPTTR) main settings

Parameter	Function	Value (Range)	Step
Overload factor	MPTTR	1.00...1.20	0.01
Alarm thermal value	MPTTR	50.0...100.0%	0.1
Restart thermal Val	MPTTR	20.0...80.0%	0.1
Weighting factor p	MPTTR	20.0...100.0%	0.1
Time constant normal	MPTTR	80...4000 s	1
Time constant start	MPTTR	80...4000 s	1
Env temperature mode	MPTTR	1 = FLC Only 2 = Use input 3 = Set Amb Temp	-
Env temperature Set	MPTTR	-20.0...70.0°C	0.1
Operation	MPTTR	1 = on 5 = off	-

148 Overload current > 1.2 × Operate level temperature

149 In case ambient temperature is measured using AMB_TEMP input, or stator temperature measured using STAT_TEMP input, the accuracy of the temperature measurement has effect to the accuracy of the calculated thermal level. This introduces additional error to the operating time as well.

23.24.139 Thermal overload protection for rotors (RPTTR)

Table 171: Thermal overload protection for rotors (RPTTR)

Characteristics	Value
Operation accuracy	Depending on the frequency of the measured current fn ±2 Hz
	Current measurement ±1.5% of the set value or ±0.002 x I_n (at currents in the range of ≤4.00 x I_n)
Operate time accuracy	±2.0% of the theoretical value or ±0.50 s

23.24.140 Thermal overload protection for rotors (RPTTR) main settings

Table 172: Thermal overload protection for rotors (RPTTR) main settings

Parameter	Function	Value (Range)	Step
Time constant normal	RPTTR	80...10000 s	1
Time constant start	RPTTR	80...10000 s	1
Time constant stop	RPTTR	80...60000 s	1
Alarm value	RPTTR	50.0...100.0 %	0.1
Restart thermal Val	RPTTR	20.0...80.0 %	0.1
Weighting factor p	RPTTR	20.0...100.0 %	0.1
Overload factor	RPTTR	1.00...1.20	0.01
Env temperature Set	RPTTR	-20.0...70.0 °C	0.1
Env temperature mode	RPTTR	1=FLC Only 2=Use input 3=Set Amb Temp	
Motor synchronous speed	RPTTR	125...3600	1
Motor nominal speed	RPTTR	100...3599	1

23.24.141 Directional negative sequence impedance protection (DNZPDIS)

Table 173: Directional negative sequence impedance protection (DNZPDIS)

Characteristics	Value
Operation accuracy	At the frequency f = f_n
	±3% of the set value or ±0.05 Ω (When |∠Z_2 - ∠RCA| is outside 80 to 100 degree)
Start time [1, 2, 3]	<75 ms
Operate time accuracy [3]	±1.0% of the set value or ±20 ms
Reset ratio	0.96
Reset time	Typically 30 ms

23.24.142 Directional negative sequence impedance protection (DNZPDIS) main settings

Table 174: Directional negative sequence impedance protection (DNZPDIS) main settings

Parameter	Function	Value (Range)	Step
Direction mode	DNZPDIS	1=Non-directional 2=Forward 3=Reverse	
Operate delay time	DNZPDIS	60...300000 ms	10
Ng Seq impedance Fw	DNZPDIS	0.01...3000.00 ohm	0.01
Ng Seq impedance Rv	DNZPDIS	-3000...-0.01 ohm	0.01
Characteristic angle	DNZPDIS	1...90 deg	1

23.24.143 Power swing detection (DSTRPSB)

Table 175: Power swing detection (DSTRPSB)

Characteristic	Value
Operation accuracy	At the frequency f = fn
	Current: ±1.5% of the set value or ±0.002 × I_n Impedance: ±3% of the set value or ±0.05 Ω

Table continues on the next page

[1] Results based on statistical distribution of 1000 measurements
[2] Includes the delay of the signal output contact (SO).
[3] During fault, Z_2= 2.0 × *Ng Seq impedance Rv/Fw*

Characteristic	Value
	Phase angle: ±2°
Reset ratio	Typically 0.96/1.04
Operate time accuracy[150]	± 1.0% of the set value or 20 ms

23.24.144 Power swing detection (DSTRPSB) main settings

Table 176: Power swing detection (DSTRPSB) main settings

Parameter	Function	Value (Range)	Step
Swing time	DSTRPSB	20...300000 ms	10
Inner R1	DSTRPSB	0.01...5999.99 ohm	0.01
Inner X1	DSTRPSB	0.01...5999.99 ohm	0.01
Inner X1 reverse	DSTRPSB	0.01...5999.99 ohm	0.01
Inner Min Ris Rch	DSTRPSB	0.01...5999.99 ohm	0.01
Outer R1	DSTRPSB	0.02...6000 ohm	0.01
Outer X1	DSTRPSB	0.02...6000 ohm	0.01
Outer X1 reverse	DSTRPSB	0.02...6000 ohm	0.01
Outer Min Ris Rch	DSTRPSB	0.02...6000 ohm	0.01
Max Ng Seq current	DSTRPSB	0.01...10 xIn	0.01
Ng Seq current time	DSTRPSB	20...1000 ms	10
Slow swing time	DSTRPSB	80...60000 ms	10
Pulse time	DSTRPSB	20...60000 ms	10
Pe Swg impedance Chr	DSTRPSB	1=Quadrilateral 2=Mho (circular)	

[150] Measured with static power output (SPO)

23.24.145 Stabilized and instantaneous differential protection for machines (MPDIF)

Table 177: Stabilized and instantaneous differential protection for machines (MPDIF)

Characteristic		Value		
Operation accuracy		Depending on the frequency of the measured current: f_n ±2 Hz ±3.0% of the set value or ±0.002 x I_n		
Operate time [151, 152]	Low stage	Minimum	Typical	Maximum
		38 ms	42 ms	44 ms
	High stage	15 ms	17 ms	26 ms
Reset time		< 40 ms		
Reset ratio		Typically 0.95		
Retardation time		<20 ms		

23.24.146 Stabilized and instantaneous differential protection for machines (MPDIF) main settings

Table 178: Stabilized and instantaneous differential protection for machines (MPDIF) main settings

Parameter	Function	Value (Range)	Step
Low operate value	MPDIF	5...30 %Ir	1
High operate value	MPDIF	100...1000 %Ir	10
Slope section 2	MPDIF	10...50%	1
End section 1	MPDIF	0...100 %Ir	1
End section 2	MPDIF	100...300 %Ir	1
DC restrain enable	MPDIF	0 = False 1 = True	-
CT connection type	MPDIF	1 = Type 1 2 = Type 2	-
CT ratio Cor Line	MPDIF	0.40...4.00	0.01
CT ratio Cor Neut	MPDIF	0.40...4.00	0.01

23.24.147 Underpower factor protection (MPUPF)

Table 179: Underpower factor protection (MPUPF)

Characteristic	Value
Operation accuracy	Dependent on the frequency of the current measured: fn ±2 Hz
	±0.018 for power factor
Operate time accuracy	±(1.0% or 30 ms)

Table continues on the next page

[151] F_n = 50 Hz, results based on statistical distribution of 1000 measurements
[152] Includes the delay of the power output contact

Characteristic	Value
Suppression of harmonics	DFT: -50 dB at f = n × f_n, where n = 2, 3, 4, 5, 6, 7
Reset time	<40 ms

23.24.148 Underpower factor protection (MPUPF) main settings

Table 180: Underpower factor protection (MPUPF) main settings

Parameter	Function	Value (Range)	Step
Min operate current	MPUPF	0.05...0.65 × I_n	0.01
Min operate voltage	MPUPF	0.05...0.50 × U_n	0.01
Disable time	MPUPF	0...60000 ms	1
Voltage reversal	MPUPF	0 = No 1 = Yes	-

23.24.149 Stabilized and instantaneous differential protection for two-winding transformers (TR2PTDF)

Table 181: Stabilized and instantaneous differential protection for two-winding transformers (TR2PTDF)

Characteristic		Value		
Operation accuracy		Depending on the frequency of the measured current: f_n ±2 Hz		
		±3.0% of the set value or ±0.002 × I_n		
Start time [153, 154]		Minimum	Typical	Maximum
	Low stage	36 ms	41 ms	46 ms
	High stage	20 ms	23 ms	24 ms
Reset time		Typically 40 ms		
Reset ratio		Typically 0.96		
Suppression of harmonics		DFT: -50 dB at f = n × f_n, where n = 2, 3, 4, 5, …		

153 Current before fault = 0.0, f_n = 50 Hz, results based on statistical distribution of 1000 measurements

154 Includes the delay of the output contact. When differential current = 2 × set operate value and f_n = 50 Hz.

23.24.150 Stabilized and instantaneous differential protection for two-winding transformers (TR2PTDF) main settings

Table 182: Stabilized and instantaneous differential protection for two-winding transformers (TR2PTDF) main settings

Parameter	Function	Value (Range)	Step
High operate value	TR2PTDF	500...3000 %Ir	10
Low operate value	TR2PTDF	5...50 %Ir	1
Slope section 2	TR2PTDF	10...50%	1
End section 2	TR2PTDF	100...500 %Ir	1
Restraint mode	TR2PTDF	5 = Waveform 6 = 2.h + waveform 8 = 5.h + waveform 9 = 2.h + 5.h + wav	-
Start value 2.H	TR2PTDF	7...20%	1
Start value 5.H	TR2PTDF	10...50%	1
Operation	TR2PTDF	1 = on 5 = off	-
Winding 1 type	TR2PTDF	1 = Y 2 = YN 3 = D 4 = Z 5 = ZN	-
Winding 2 type	TR2PTDF	1 = y 2 = yn 3 = d 4 = z 5 = zn	-
Zro A elimination	TR2PTDF	1 = Not eliminated 2 = Winding 1 3 = Winding 2 4 = Winding 1 and 2	-

23.24.151 Numerical stabilized low-impedance restricted earth-fault protection (LREFPNDF)

Table 183: Numerical stabilized low-impedance restricted earth-fault protection (LREFPNDF)

Characteristic		Value		
Operation accuracy		Depending on the frequency of the measured current: f_n ±2 Hz		
		±2.5% of the set value or ±0.002 x I_n		
Start time [155, 156]	I_{Fault} = 2.0 × set Operate value	Minimum	Typical	Maximum
		37 ms	41 ms	45 ms
Reset time		Typically 40 ms		
Reset ratio		Typically 0.96		
Retardation time		<35 ms		
Operate time accuracy in definite time mode		±1.0% of the set value or ±20 ms		
Suppression of harmonics		DFT: -50 dB at f = n × f_n, where n = 2, 3, 4, 5, …		

23.24.152 Numerical stabilized low-impedance restricted earth-fault protection (LREFPNDF) main settings

Table 184: Numerical stabilized low-impedance restricted earth-fault protection (LREFPNDF) main settings

Parameter	Function	Value (Range)	Step
Operate value	LREFPNDF	5.0. 50.0 %I_n	1
Minimum operate time	LREFPNDF	40...300000 ms	1
Restraint mode	LREFPNDF	1 = None 2 = Harmonic2	-
Start value 2.H	LREFPNDF	10...50%	1
Operation	LREFPNDF	1 = on 5 = off	-

155 Current before fault = 0.0, f_n = 50 Hz, results based on statistical distribution of 1000 measurements

156 Includes the delay of the signal output contact

23.24.153 High-impedance based restricted earth-fault protection (HREFPDIF)

Table 185: High-impedance based restricted earth-fault protection (HREFPDIF)

Characteristic		Value		
Operation accuracy		Depending on the frequency of the measured current: f_n ±2 Hz		
		±1.5% of the set value or ±0.002 × I_n		
Start time [157, 158]		Minimum	Typical	Maximum
	I_{Fault} = 2.0 × set *Operate value*	16 ms	21 ms	23 ms
	I_{Fault} = 10 × set *Operate value*	11 ms	13 ms	14 ms
Reset time		Typically 40 ms		
Reset ratio		Typically 0.96		
Retardation time		<35 ms		
Operate time accuracy in definite time mode		±1.0% of the set value or ±20 ms		

23.24.154 High-impedance based restricted earth-fault protection (HREFPDIF) main settings

Table 186: High-impedance based restricted earth-fault protection (HREFPDIF) main settings

Parameter	Function	Value (Range)	Step
Operate value	HREFPDIF	1.0 50.0%I_n	0.1
Minimum operate time	HREFPDIF	20...300000 ms	1
Operation	HREFPDIF	1 = on 5 = off	-

23.24.155 High-impedance differential protection (HIxPDIF)

Table 187: High-impedance differential protection (HIxPDIF)

Characteristic		Value		
Operation accuracy		Depending on the frequency of the current measured: f_n ±2 Hz		
		±1.5% of the set value or ±0.002 × I_n		
Start time [159, 160]		Minimum	Typical	Maximum
	I_{Fault} = 2.0 × set *Start value*	13 ms	17 ms	20 ms
	I_{Fault} = 10 × set *Start value*	12 ms	14 ms	16 ms

Table continues on the next page

157 Current before fault = 0.0 × I_n, f_n = 50 Hz, results based on statistical distribution of 1000 measurements
158 Includes the delay of the signal output contact
159 *Measurement mode* = default (depends on stage), current before fault = 0.0 × I_n, f_n = 50 Hz, fault current with nominal frequency injected from random phase angle, results based on statistical distribution of 1000 measurements.
160 Includes the delay of the signal output contact.

Characteristic	Value
Reset time	<40 ms
Reset ratio	Typically 0.96
Retardation time	<35 ms
Operate time accuracy in definite time mode	±1.0% of the set value or ±20 ms

23.24.156 High-impedance differential protection (HIxPDIF) main settings

Table 188: High-impedance differential protection (HIxPDIF) main settings

Parameter	Function	Value (Range)	Step
Operate value	HIxPDIF	1.0 200.0 %I_n	1.0
Minimum operate time	HIxPDIF	20...300000 ms	10

23.24.157 Circuit breaker failure protection (CCBRBRF)

Table 189: Circuit breaker failure protection (CCBRBRF)

Characteristic	Value
Operation accuracy	Depending on the frequency of the measured current: f_n ±2 Hz
	±1.5% of the set value or ±0.002 × I_n
Operate time accuracy	±1.0% of the set value or ±20 ms
Reset time	<20 ms
Retardation time	<20 ms

23.24.158 Circuit breaker failure protection (CCBRBRF) main settings

Table 190: Circuit breaker failure protection (CCBRBRF) main settings

Parameter	Function	Value (Range)	Step
Current value	CCBRBRF	0.05...2.00 × I_n	0.01
Current value Res	CCBRBRF	0.05...2.00 × I_n	0.01
CB failure trip mode	CCBRBRF	1 = 2 out of 4 2 = 1 out of 3 3 = 1 out of 4	-
CB failure mode	CCBRBRF	1 = Current 2 = Breaker status 3 = Both (AND) -1 = Both (OR)	-
Retrip time	CCBRBRF	0...60000 ms	10
CB failure delay	CCBRBRF	0...60000 ms	10
CB fault delay	CCBRBRF	0...60000 ms	10

23.24.159 Three-phase inrush detector (INRPHAR)

Table 191: Three-phase inrush detector (INRPHAR)

Characteristic	Value
Operation accuracy	At the frequency f = f_n
	Current measurement: ±1.5% of the set value or ±0.002 × I_n Ratio I2f/I1f measurement: ±3 % of the set value or ±0.01 × I_n
Reset time	+35 ms / -0 ms
Reset ratio	Typically 0.96
Operate time accuracy	+35 ms / -0 ms

23.24.160 Three-phase inrush detector (INRPHAR) main settings

Table 192: Three-phase inrush detector (INRPHAR) main settings

Parameter	Function	Value (Range)	Step
Start value	INRPHAR	5...100%	1
Operate delay time	INRPHAR	20...60000 ms	1

23.24.161 Residual current inrush detector (RINRPHAR)

Table 193: Residual current inrush detector (RINRPHAR)

Characteristic	Value
Operation accuracy	At the frequency f = f_n
	Current measurement: ±1.5% or ±0.002 xI_n Ratio I2f/I1f measurement: ±3.0 % of the set value or ±0.01xI_n
Reset time	+35ms / -0ms
Reset ratio	Typically 0.96
Operation time accuracy	+35ms / -0ms

23.24.162 Residual current inrush detector (RINRPHAR) main settings

Table 194: Residual current inrush detector (RINRPHAR) main settings

Parameter	Function	Values (Range)	Step
Start value	RINRPHAR	5...100	1
Operate delay time	RINRPHAR	20...60000	1
Latch value	RINRPHAR	1...2500	1

23.24.163 Arc protection (ARCSARC)

Table 195: Arc protection (ARCSARC)

Characteristic		Value Includes the delay of the heavy-duty output contact		
Operation accuracy		±3% of the set value or ±0.01 × I_n		
Operate time [1]		Minimum	Typical	Maximum
	Operation mode = "Light+current"	11 ms [2] 5 ms [3]	12 ms [2] 6 ms [3] col4	13 ms [2] 9 ms [3]
	Operation mode = "Light only"	10 ms [2] 5 ms [3]	12 ms [2] 7 ms [3]	13 ms [2] 9 ms [3]
Reset time		Typically 40 ms		
Reset ratio		Typically 0.96		

23.24.164 Arc protection (ARCSARC) main settings

Table 196: Arc protection (ARCSARC) main settings

Parameter	Function	Value (Range)	Step
Phase start value	ARCSARC	0.50...40.00 × I_n	0.01
Ground start value	ARCSARC	0.05...8.00 × I_n	0.01
Operation mode	ARCSARC	1 = Light+current 2 = Light only 3 = BI controlled	-

[1] *Phase start value* = 1.0 × I_n, current before fault = 2.0 × set *Phase start value*, f = 50 Hz, fault with nominal frequency, results based on statistical distribution of 200 measurements. Includes the delay of the heavy-duty output contact.
[2] Normal power output
[3] High-speed output

23.24.165 High-impedance fault detection (PHIZ) main settings

Table 197: High-impedance fault detection (PHIZ) main settings

Parameter	Function	Value (Range)	Step
Security Level	PHIZ	1...10	1
System type	PHIZ	1 = Grounded 2 = Ungrounded	-

23.24.166 Fault locator (SCEFRFLO)

Table 198: Fault locator (SCEFRFLO)

Characteristic	Value
Measurement accuracy	At the frequency f = f_n
	Impedance: ±2.5% or ±0.25 Ω
	Distance: ±2.5% or ±0.16 km/0.1 mile
	XC0F_CALC: ±2.5% or ±50 Ω
	IFLT_PER_ILD: ±5% or ±0.05

23.24.167 Fault locator (SCEFRFLO) main settings

Table 199: Fault locator (SCEFRFLO) main settings

Parameter	Function	Value (Range)	Step
Z Max phase load	SCEFRFLO	1.0...10000.00 Ω	0.1
Ph leakage Ris	SCEFRFLO	20...1000000 Ω	1
Ph capacitive React	SCEFRFLO	10...1000000 Ω	1
R1 line section A	SCEFRFLO	0.000...1000.000 Ω/pu	0.001
X1 line section A	SCEFRFLO	0.000...1000.000 Ω/pu	0.001
R0 line section A	SCEFRFLO	0.000...1000.000 Ω/pu	0.001
X0 line section A	SCEFRFLO	0.000...1000.000 Ω/pu	0.001
Line Len section A	SCEFRFLO	0.000...1000.000 pu	0.001

23.24.168 Load-shedding and restoration (LSHDPFRQ)

Table 200: Load-shedding and restoration (LSHDPFRQ)

Characteristic		Value
Operation accuracy	f<	±5 mHz
	df/dt	±100 mHz/s (in range |df/dt| < 5 Hz/s) ± 2.0% of the set value (in range 5 Hz/s < |df/dt| < 15 Hz/s)
Start time	f<	<80 ms
	df/dt	<120 ms
Reset time		<150 ms
Operate time accuracy		±1.0% of the set value or ±30 ms

23.24.169 Load-shedding and restoration (LSHDPFRQ) main settings

Table 201: Load-shedding and restoration (LSHDPFRQ) main settings

Parameter	Function	Value (Range)	Step
Load shed mode	LSHDPFRQ	1 = Freq< 6 = Freq< OR df/dt 8 = Freq< AND df/dt	-
Restore mode	LSHDPFRQ	1 = Disabled 2 = Auto 3 = Manual	-
Start value Freq	LSHDPFRQ	0.6500 1.200 × f_n	0.001
Start value df/dt	LSHDPFRQ	-0.200 0.005 × f_n/s	0.005
Operate Tm Freq	LSHDPFRQ	80...200000 ms	10
Operate Tm df/dt	LSHDPFRQ	120...200000 ms	10
Restore start Val	LSHDPFRQ	0.6500 1.200 × f_n	0.001
Restore delay time	LSHDPFRQ	80...200000 ms	10

23.24.170 Multipurpose protection (MAPGAPC)

Table 202: Multipurpose protection (MAPGAPC)

Characteristic	Value
Operation time	±1.0% of the set value or ±20 ms
Operation accuracy (RTD/mA)	+/- 2C | 2% mA

23.24.171 Multipurpose protection (MAPGAPC) main settings

Table 203: Multipurpose protection (MAPGAPC) main settings

Parameter	Function	Value (Range)	Step
Start value	MAPGAPC	-10000.0...10000.0	0.1
Operate delay time	MAPGAPC	0...200000 ms	100
Operation mode	MAPGAPC	1 = Over 2 = Under	-

23.24.172 Current disturbance detector (CDDPTOC)

Table 204: Current disturbance detector (CDDPTOC)

Characteristic	Value
Operation accuracy	Depending on the frequency of the measured current: fn ±2 Hz
	±1.5% of the set value or ±0.002 × In
Operate time accuracy	±1.0% of the set value or ±20 ms

23.24.173 Current disturbance detector (CDDPTOC) main settings

Table 205: Current disturbance detector (CDDPTOC) main settings

Parameter	Function	Value (Range)	Step
Current change rate	CDDPTOC	5.0...100.0	0.1
Change direction	CDDPTOC	1=Increase 2=Decrease 3=Both	-

23.24.174 Operation characteristics

Table 206: Operation characteristics

Parameter	Value (Range)
Operating curve type	1 = ANSI Ext. inv. 2 = ANSI Very. inv. 3 = ANSI Norm. inv. 4 = ANSI Mod inv. 5 = ANSI Def. Time 6 = L.T.E. inv. 7 = L.T.V. inv. 8 = L.T. inv. 9 = IEC Norm. inv. 10 = IEC Very inv. 11 = IEC inv. 12 = IEC Ext. inv. 13 = IEC S.T. inv. 14 = IEC L.T. inv 15 = IEC Def. Time 17 = Programmable 18 = RI type 19 = RD type
Operating curve type (voltage protection)	5 = ANSI Def. Time 15 = IEC Def. Time 17 = Inv. Curve A 18 = Inv. Curve B 19 = Inv. Curve C 20 = Programmable 21 = Inv. Curve A 22 = Inv. Curve B 23 = Programmable

23.24.175 Cable fault detection (RCFD)

Table 207: Cable fault detection (RCFD)

Characteristic	Value		
Operation accuracy	Depending on the frequency of the measured current: f_n ±2 Hz		
	±2.5% of the set value or 0.005 xI_n		
Alarm time[161, 162]	Minimum	Typical	Maximum
	17 ms	22 ms	25 ms

161 Results based on statistical distribution of 1000 measurements
162 Includes the delay of the signal output contact.

23.24.176 Cable fault detection (RCFD) main settings

Table 208: Cable fault detection (RCFD) main settings

Parameter	Function	Value (Range)	Step
Adaptive Str Val Ena	RCFD		
Maximum fault cycle	RCFD	1...20	1
Minimum load current	RCFD	0.00...1.00 xIn	0.10
Residual current limit	RCFD	0.00...1.00 xIn	0.10
Phase start value	RCFD	0.10...40.00 xIn	0.01
Residual start value	RCFD	0.10...40.00 xIn	0.01

23.25 Control functions

23.25.1 Emergency start-up (ESMGAPC)

Table 209: Emergency start-up (ESMGAPC)

Characteristic	Value
Operation accuracy	At the frequency f = f_n
	±1.5% of the set value or ±0.002 × U_n

23.25.2 Emergency start-up (ESMGAPC) main settings

Table 210: Emergency start-up (ESMGAPC) main settings

Parameter	Function	Value (Range)	Step
Motor stand still A	ESMGAPC	0.01...0.20 × I_n	0.01

23.25.3 Autoreclosing (DARREC)

Table 211: Autoreclosing (DARREC)

Characteristic	Value
Operate time accuracy	±1.0% of the set value or ±20 ms

23.25.4 Synchronism and energizing check (SECRSYN)

Table 212: Synchronism and energizing check (SECRSYN)

Characteristic	Value
Operation accuracy	Depending on the frequency of the voltage measured: f_n ±1 Hz Voltage: ±3.0% of the set value or ±0.01 × U_n Frequency: ±10 mHz Phase angle: ±3°
Reset time	<50 ms
Reset ratio	Typically 0.96
Operate time accuracy in definite time mode	±1.0% of the set value or ±20 ms

23.25.5 Synchronism and energizing check (SECRSYN) main settings

Table 213: Synchronism and energizing check (SECRSYN) main settings

Parameter	Function	Value (Range)	Step
Live dead mode	SECRSYN	-1 = Off 1 = Both Dead 2 = Live L, Dead B 3 = Dead L, Live B 4 = Dead Bus, L Any 5 = Dead L, Bus Any 6 = One Live, Dead 7 = Not Both Live	-
Difference voltage	SECRSYN	0.01...0.50 × U_n	0.01
Difference frequency	SECRSYN	0.001...0.100 × f_n	0.001
Difference angle	SECRSYN	5...90°	1
Synchrocheck mode	SECRSYN	1 = Off 2 = Synchronous 3 = Asynchronous	-
Dead line value	SECRSYN	0.1...0.8 × U_n	0.1
Live line value	SECRSYN	0.2...1.0 × U_n	0.1
Max energizing V	SECRSYN	0.50...1.15 × U_n	0.01
Control mode	SECRSYN	1 = Continuous 2 = Command	-
Close pulse	SECRSYN	200...60000 ms	10
Phase shift	SECRSYN	-180...180°	1
Minimum Syn time	SECRSYN	0...60000 ms	10
Maximum Syn time	SECRSYN	100...6000000 ms	10
Energizing time	SECRSYN	100...60000 ms	10
Closing time of CB	SECRSYN	40...250 ms	10

23.25.6 Tap changer control with voltage regulator (OLATCC)

Table 214: Tap changer control with voltage regulator (OLATCC)

Characteristic	Value
Operation accuracy [1]	Depending on the frequency of the measured current: f_n ±2 Hz
	Differential voltage U_d = ±0.5% of the measured value or ±0.005 × U_n (in measured voltages <2.0 × U_n)
	Operation value = ±1.5% of the U_d for Us = 1.0 × U_n
Operate time accuracy in definite time mode [2]	+4.0%/-0% of the set value
Operate time accuracy in inverse time mode [2]	+8.5%/-0% of the set value
	(at theoretical B in range of 1.1…5.0)
	Also note fixed minimum operate time (IDMT) 1 s.
Reset ratio for control operation	Typically 0.80 (1.20)
Reset ratio for analogue based blockings (except run back raise voltage blocking)	Typically 0.96 (1.04)

23.25.7 Tap changer control with voltage regulator (OLATCC) main settings

Table 215: Tap changer control with voltage regulator (OLATCC) main settings

Parameter	Function	Value (Range)	Step
Auto parallel mode	OLATCC	2 = Auto master	-
		3 = Auto follower	
		5 = NRP	
		7 = MCC	
Band center voltage	OLATCC	0.000...2.000 × U_n	0.001
Line drop V Ris	OLATCC	0.0...25.0%	0.1
Line drop V React	OLATCC	0.0...25.0%	0.1
Stability factor	OLATCC	0.0...70.0%	0.1
Load phase angle	OLATCC	-89...89°	1
Control delay time 1	OLATCC	1000...300000 ms	100
Control delay time 2	OLATCC	1000...300000 ms	100
Operation mode	OLATCC	1 = Manual	-
		2 = Auto single	
		3 = Auto parallel	
		4 = Input control	
		5 = Command	

Table continues on the next page

[1] Default setting values used
[2] Voltage before deviation = set *Band center voltage*

Parameter	Function	Value (Range)	Step
Custom Man blocking	OLATCC	1 = Custom disabled 2 = OC 3 = UV 4 = OC, UV 5 = EXT 6 = OC, EXT 7 = UV, EXT 8 = OC, UV, EXT	-
Delay characteristics	OLATCC	0 = Inverse time 1 = Definite time	-
Band width voltage	OLATCC	1.20...18.00 % U_n	0.01
Load current limit	OLATCC	0.10...5.00 × I_n	0.01
Block lower voltage	OLATCC	0.10...1.20 × U_n	0.01
Runback raise V	OLATCC	0.80...2.40 × U_n	0.01
Cir current limit	OLATCC	0.10...5.00 × I_n	0.01
LDC limit	OLATCC	0.00...2.00 × U_n	0.01
Lower block tap	OLATCC	-36...36	-
Raise block tap	OLATCC	-36...36	-
LCT pulse time	OLATCC	500...10000 ms	100
LDC enable	OLATCC	0 = False 1 = True	-
Follower delay time	OLATCC	6...20 s	-

23.25.8 Tap changer control with voltage regulator (OL5ATCC)

Table 216: Tap changer control with voltage regulator (OL5ATCC)

Characteristic	Value
Operation accuracy [163]	Depending on the frequency of the measured current: fn ±2 Hz
	Differential voltage U_d = ±0.5% of the measured value or ±0.005 × U_n (in measured voltages <2.0 × U_n) Operation value = ±1.5% of the U_d for Us = 1.0 × U_n
Operate time accuracy in definite time mode [164]	+4.0%/-0% of the set value
Operate time accuracy in inverse time mode [138]	+8.5%/-0% of the set value (at theoretical B in range of 1.1…5.0) Also note fixed minimum operate time (IDMT) 1 s

Table continues on the next page

[163] Default setting values used
[164] Voltage before deviation = set *Band center voltage*

Characteristic	Value
Reset ratio for control operation	Typically 0.80 (1.20)
Reset ratio for analog based blockings (except run back raise voltage blocking)	Typically 0.96 (1.04)

23.25.9 Tap changer control with voltage regulator (OL5ATCC) main settings

Table 217: Tap changer control with voltage regulator (OL5ATCC) main settings

Parameter	Function	Value (Range)	Step
LDC enable	OL5ATCC	0 = False 1 = True	-
Parallel mode	OL5ATCC	2 = Master 3 = Follower 5 = NRP 7 = MCC -1 = Input control -2 = Command	-
Band center voltage	OL5ATCC	0.000...2.000 × U_n	0.001
Line drop V Ris	OL5ATCC	0.0...25.0%	0.1
Line drop V React	OL5ATCC	0.0...25.0%	0.1
Band reduction	OL5ATCC	0.00...9.00 %U_n	0.01
Stability factor	OL5ATCC	0.0...70.0%	0.1
Rv Pwr flow allowed	OL5ATCC	0 = False 1 = True	-
Operation mode	OL5ATCC	1 = Manual 2 = Auto single 3 = Parallel manual 4 = Auto parallel 5 = Input control 6 = Command	-
Parallel trafos	OL5ATCC	0...10	1
Delay characteristic	OL5ATCC	0 = Inverse time 1 = Definite time	-
Band width voltage	OL5ATCC	1.20...18.00 %U_n	0.01
Load current limit	OL5ATCC	0.10...5.00 × I_n	0.01
Block lower voltage	OL5ATCC	0.10...1.20 × U_n	0.01
LTC pulse time	OL5ATCC	500...10000 ms	100

23.26 Condition monitoring and supervision functions

23.26.1 Circuit-breaker condition monitoring (SSCBR)

Table 218: Circuit-breaker condition monitoring (SSCBR)

Characteristic	Value
Current measuring accuracy	±1.5% or ±0.002 × I_n (at currents in the range of 0.1…10 × I_n) ±5.0% (at currents in the range of 10…40 × I_n)
Operate time accuracy	±1.0% of the set value or ±20 ms
Travelling time measurement	+10 ms / -0 ms

23.26.2 Motor controlled earthing switch and disconnector supervision (ESDCSSWI)

Table 219: Motor controlled earthing switch and disconnector supervision (ESDCSSWI)

Characteristic	Value
Operate time accuracy	±1.0 % of the set value or ±20 ms
Travelling time measurement	+10 ms / -5 ms

23.26.3 Motor controlled earthing switch and disconnector supervision (ESDCSSWI) main settings

Table 220: Motor controlled earthing switch and disconnector supervision (ESDCSSWI) main settings

Parameter	Function	Value (Range)	Step
Alarm Op number	ESDCSSWI	0...99999	1
Open alarm time	ESDCSSWI	40...30000 ms	10
Close alarm time	ESDCSSWI	40...30000 ms	10
Inactive Alm days	ESDCSSWI	0...9999	1
Inactive Alm hours	ESDCSSWI	0...23 h	1
Travel time Clc mode	ESDCSSWI	1=From Cmd to Pos 2=From Pos to Pos	

23.26.4 Hot-spot and insulation ageing rate monitoring for transformers (HSARSPTR)

Table 221: Hot-spot and insulation ageing rate monitoring for transformers (HSARSPTR)

Characteristic	Value
Warning/alarm time accuracy	±1.0% of the set value or ±0.50 s

23.26.5 Hot-spot and insulation ageing rate monitoring for transformers (HSARSPTR) main settings

Table 222: Hot-spot and insulation ageing rate monitoring for transformers (HSARSPTR) main settings

Parameter	Function	Value (Range)	Step
Cooling mode	HSARSPTR	1 = ONAN 2 = ONAF 3 = OFAF 4 = ODAF	-
Alarm level	HSARSPTR	50.0...350.0°C	0.1
Warning level	HSARSPTR	50.0...350.0°C	0.1
Alarm delay time	HSARSPTR	0...3600000 ms	10
Warning delay time	HSARSPTR	0...3600000 ms	10
Average ambient Tmp	HSARSPTR	-20.00...70.00°C	0.01
Alarm level Age Rte	HSARSPTR	0.00...100.00	1

23.26.6 Current circuit supervision (CCSPVC)

Table 223: Current circuit supervision (CCSPVC)

Characteristic	Value
Operate time [165]	<30 ms

23.26.7 Current circuit supervision (CCSPVC) main settings

Table 224: Current circuit supervision (CCSPVC) main settings

Parameter	Function	Value (Range)	Step
Start value	CCSPVC	0.05...0.20 × I_n	0.01
Max operate current	CCSPVC	1.00...5.00 × I_n	0.01

[165] Including the delay of the output contact

23.26.8 Advanced current circuit supervision for transformers (CTSRCTF)

Table 225: Advanced current circuit supervision for transformers (CTSRCTF)

Characteristic	Value
Operate time [166]	<30 ms

23.26.9 Current circuit supervision (CTSRCTF) main settings

Table 226: Current circuit supervision (CTSRCTF) main settings

Parameter	Function	Value (Range)	Step
Min operate current	CTSRCTF	0.01...0.50 × I_n	0.01
Max operate current	CTSRCTF	1.00...5.00 × I_n	0.01
Max Ng Seq current	CTSRCTF	0.01...1.00 × I_n	0.01

23.26.10 Current transformer supervision for high-impedance protection scheme (HZCCxSPVC)

Table 227: Current transformer supervision for high-impedance protection scheme (HZCCxSPVC)

Characteristic	Value
Oeration accuracy	Depending on the frequency of the current measured: f_n ±2 Hz
	±1.5% of the set value or ±0.002 × I_n
Reset time	<40 ms
Reset ratio	Typically 0.96
Retardation time	<35 ms
Operate time accuracy in definite time mode	±1.0% of the set value or ±20 ms

23.26.11 Current transformer supervision for high-impedance protection scheme (HZCCxSPVC) main settings

Table 228: Current transformer supervision for high-impedance protection scheme (HZCCxSPVC) main settings

Parameter	Function	Value (Range)	Step
Start value	HZCCxSPVC	1.0...100.0 %I_n	0.1
Alarm delay time	HZCCxSPVC	100...300000 ms	10
Alarm output mode	HZCCxSPVC	1 = Non-latched 3 = Lockout	-

[166] Including the delay of the output contact

23.26.12 Fuse failure supervision (SEQSPVC)

Table 229: Fuse failure supervision (SEQSPVC)

Characteristic		Value	
Operation accuracy	All functions	Depending on the frequency of the current measured: f_n ±2 Hz	
		±1.5 % of the set value or ±0.002 x U_n/I_n	
Operate time [167]	NPS or ZPS function	U_{Fault} = 1.1 × set *Neg/Zero Seq voltage Lev*	<35 ms
		U_{Fault} = 5.0 × set *Neg/Zero Seq voltage Lev*	<20 ms
	Delta function	ΔU = 1.1 × set *Voltage change rate*	<35 ms
		ΔU = 2.0 × set *Voltage change rate*	<25 ms
Reset time	All functions		<35 ms

23.26.13 Fuse failure supervision (SEQSPVC) main settings

Table 230: Fuse failure supervision (SEQSPVC) main settings

Parameter	Function	Value (Range)	Step
Neg Seq current Lev	SEQSPVC	0.01...1.00	0.01
Neg Seq voltage Lev	SEQSPVC	0.01...1.00	0.01
Current change rate	SEQSPVC	0.01...0.50	0.01
Voltage change rate	SEQSPVC	0.25...0.90	0.01
Min Op voltage delta	SEQSPVC	0.01...1.00	0.01
Min Op current delta	SEQSPVC	0.01...1.00	0.01
Current dead Lin Val	SEQSPVC	0.05...1.00	0.01

23.26.14 Runtime counter for machines and devices (MDSOPT)

Table 231: Runtime counter for machines and devices (MDSOPT)

Description	Value
Motor runtime measurement accuracy[168]	±0.5%

[167] Includes the delay of the signal output contact, f_n = 50 Hz, fault voltage with nominal frequency injected from random phase angle, results based on statistical distribution of 1000 measurements.

[168] Of the reading, for a stand-alone relay, without time synchronization

23.26.15 Runtime counter for machines and devices (MDSOPT) main settings

Table 232: Runtime counter for machines and devices (MDSOPT) main settings

Parameter	Function	Value (Range)	Step
Warning value	MDSOPT	0...299999 h	1
Alarm value	MDSOPT	0...299999 h	1
Initial value	MDSOPT	0...299999 h	1
Operating time hour	MDSOPT	0...23 h	1
Operating time mode	MDSOPT	1 = Immediate 2 = Timed Warn 3 = Timed Warn Alm	-

23.26.16 Three-phase remanent undervoltage supervision (MSVPR)

Table 233: Three-phase remanent undervoltage supervision (MSVPR)

Characteristic	Value
Operation accuracy	Depending on the frequency of the measured voltage: 20 Hz < f ≤ 70 Hz: ±1.5% of the set value or ±0.002 × U_n 10 Hz < f ≤ 20 Hz: ±4.0% of the set value or ±0.002 × U_n
Reset time	Typically 40 ms
Reset ratio	Typically 1.04
Operate time accuracy in definite time mode	±1.0% of the set value or ±20 ms

23.26.17 Three-phase remanent undervoltage supervision (MSVPR) main settings

Table 234: Three-phase remanent undervoltage supervision (MSVPR) main settings

Parameter	Function	Value (Range)	Step
Start value	MSVPR	0.05...1.20 × U_n	0.01
Operate delay time	MSVPR	100...300000 ms	100

Table continues on the next page

Parameter	Function	Value (Range)	Step
Voltage selection	MSVPR	1 = phase-to-earth 2 = phase-to-phase	-
Num of phases	MSVPR	1 = 1 out of 3 2 = 2 out of 3 3 = 3 out of 3	-

23.27 Measurement functions

23.27.1 Three-phase current measurement (CMMXU)

Table 235: Three-phase current measurement (CMMXU)

Characteristic	Value
Operation accuracy	Depending on the frequency of the measured current: f_n ±2 Hz
	±0.5% or ±0.002 × I_n (at currents in the range of 0.01...4.00 × I_n)
Suppression of harmonics	DFT: -50 dB at f = n × f_n, where n = 2, 3, 4, 5,… RMS: No suppression

23.27.2 Sequence current measurement (CSMSQI)

Table 236: Sequence current measurement (CSMSQI)

Characteristic	Value
Operation accuracy	Depending on the frequency of the measured current: f/f_n = ±2 Hz
	±1.0% or ±0.002 × I_n at currents in the range of 0.01...4.00 × I_n
Suppression of harmonics	DFT: -50 dB at f = n × f_n, where n = 2, 3, 4, 5,…

23.27.3 Residual current measurement (RESCMMXU)

Table 237: Residual current measurement (RESCMMXU)

Characteristic	Value
Operation accuracy	Depending on the frequency of the current measured: f/f_n = ±2 Hz
	±0.5% or ±0.002 × I_n at currents in the range of 0.01...4.00 × I_n
Suppression of harmonics	DFT: -50 dB at f = n × f_n, where n = 2, 3, 4, 5,… RMS: No suppression

23.27.4 Three-phase voltage measurement (VMMXU)

Table 238: Three-phase voltage measurement (VMMXU)

Characteristic	Value
Operation accuracy	Depending on the frequency of the voltage measured: f_n ±2 Hz At voltages in range 0.01…1.15 × U_n
	±0.5% or ±0.002 × U_n
Suppression of harmonics	DFT: -50 dB at f = n × f_n, where n = 2, 3, 4, 5,… RMS: No suppression

23.27.5 Phase voltage measurement (VPHMMXU)

Table 239: VPHMMXU Technical data

Characteristic	Value
Operation accuracy	Depending on the frequency of the voltage measured: f_n ±2 Hz At voltages in range 0.01…1.15 × U_n
	±0.5 % or ±0.002 × U_n
Suppression of harmonics	DFT: -50 dB at f = n × f_n, where n = 2, 3, 4, 5,… RMS: No suppression

23.27.6 Single-phase voltage measurement (VAMMXU)

Table 240: Single-phase voltage measurement (VAMMXU)

Characteristic	Value
Operation accuracy	Depending on the frequency of the voltage measured: f_n ±2 Hz At voltages in range 0.01…1.15 × U_n
	±0.5% or ±0.002 × U_n
Suppression of harmonics	DFT: -50 dB at f = n × f_n, where n = 2, 3, 4, 5,… RMS: No suppression

23.27.7 Residual voltage measurement (RESVMMXU)

Table 241: Residual voltage measurement (RESVMMXU)

Characteristic	Value
Operation accuracy	Depending on the frequency of the measured voltage: f/f_n = ±2 Hz
	±0.5% or ±0.002 × U_n
Suppression of harmonics	DFT: -50 dB at f = n × f_n, where n = 2, 3, 4, 5,… RMS: No suppression

23.27.8 Sequence voltage measurement (VSMSQI)

Table 242: Sequence voltage measurement (VSMSQI)

Characteristic	Value
Operation accuracy	Depending on the frequency of the voltage measured: f_n ±2 Hz At voltages in range 0.01…1.15 × U_n
	±1.0% or ±0.002 × U_n
Suppression of harmonics	DFT: -50 dB at f = n × f_n, where n = 2, 3, 4, 5,…

23.27.9 Three-phase power and energy measurement (PEMMXU)

Table 243: Three-phase power and energy measurement (PEMMXU)

Characteristic	Value
Operation accuracy [169]	At all three currents in range 0.10…1.20 × In At all three voltages in range 0.50…1.15 × U_n At the frequency f_n ±1 Hz
	±1.5% for apparent power S

Table continues on the next page

169 *Measurement mode* = "Pos Seq" (default)

Characteristic	Value
	±1.5% for active power P and active energy [170]
	±1.5% for reactive power Q and reactive energy [171]
	±0.015 for power factor
Suppression of harmonics	DFT: -50 dB at f = n × f_n, where n = 2, 3, 4, 5,…

23.27.10 Single-phase power and energy measurement (SPEMMXU)

Table 244: Single-phase power and energy measurement (SPEMMXU)

Characteristic	Value
Operation accuracy	At all three currents in range 0.10…1.20 × I_n At all three voltages in range 0.50…1.15 × U_n At the frequency f_n ±1 Hz Active power and energy in range |PF| > 0.71 Reactive power and energy in range |PF| < 0.71
	±1.5% for power (S, P and Q) ±0.015 for power factor ±1.5% for energy
Suppression of harmonics	DFT: -50 dB at f = n x f_n, where n = 2, 3, 4, 5,…

23.27.11 Frequency measurement (FMMXU)

Table 245: Frequency measurement (FMMXU)

Characteristic	Value
Operation accuracy	±5 mHz (in measurement range 35...75 Hz)

23.27.12 Tap changer position indication (TPOSYLTC)

Table 246: Tap changer position indication (TPOSYLTC)

Characteristic	Value
Response time for binary inputs	Typically 100 ms

23.28 Power quality functions

[170] |PF| >0.5 which equals |cosϕ| >0.5
[171] |PF| <0.86 which equals |sinϕ| >0.5

23.28.1 Current total demand, harmonic distortion, DC component (TDD, THD, DC) and individual harmonics (CHMHAI)

Table 247: Current total demand, harmonic distortion, DC component (TDD, THD, DC) and individual harmonics (CHMHAI)

Characteristic	Value
Operation accuracy [172]	±3.0% or ±0.2

23.28.2 Current total demand, harmonic distortion, DC component (TDD, THD, DC) and individual harmonics (CHMHAI) main settings

Table 248: Current total demand, harmonic distortion, DC component (TDD, THD, DC) and individual harmonics (CHMHAI) main settings

Parameter	Function	Value (Range)	Step
Sliding interval	CHMHAI	1 = 3 seconds 2 = 1 minute 3 = 5 minutes	-
Reference Cur Sel	CHMHAI	0 = fundamental 2 = absolute	-
Demand current	CHMHAI	0.10...1.00 × I_n	0.01

23.28.3 Voltage total harmonic distortion, DC component (THD, DC) and individual harmonics (VHMHAI)

Table 249: Voltage total harmonic distortion, DC component (THD, DC) and individual harmonics (VHMHAI)

Characteristic	Value
Operation accuracy [173]	±3.0% or ±0.2

[172] Nominal frequency 50 Hz. Harmonics in the range 0…0.21 × fundamental amplitude
[173] Nominal frequency 50 Hz. Harmonics in the range 0…0.21 × fundamental amplitude

23.28.4 Voltage total harmonic distortion, DC component (THD, DC) and individual harmonics (VHMHAI) main settings

Table 250: Voltage total harmonic distortion, DC component (THD, DC) and individual harmonics (VHMHAI) main settings

Parameter	Function	Value (Range)	Step
Sliding interval	VHMHAI	1 = 3 seconds 2 = 1 minute 3 = 5 minutes	-

23.28.5 Voltage variation (PHQVVR)

Table 251: Voltage variation (PHQVVR)

Characteristic	Value
Operation accuracy	±1.5% of the set value or ±0.2% of reference voltage
Reset ratio	Typically 0.96 (Swell), 1.04 (Dip, Interruption)

23.28.6 Voltage variation (PHQVVR) main settings

Table 252: Voltage variation (PHQVVR) main settings

Parameter	Function	Value (Range)	Step
Voltage dip set 1	PHQVVR	10.0...100.0%	0.1
Voltage dip set 2	PHQVVR	10.0...100.0%	0.1
Voltage dip set 3	PHQVVR	10.0...100.0%	0.1
Voltage swell set 1	PHQVVR	100.0...140.0%	0.1
Voltage swell set 2	PHQVVR	100.0...140.0%	0.1
Voltage swell set 3	PHQVVR	100.0...140.0%	0.1
Voltage Int set	PHQVVR	0.0...100.0%	0.1
VVa Dur Max	PHQVVR	100...3600000 ms	100

23.28.7 Voltage unbalance (VSQVUB)

Table 253: Voltage unbalance (VSQVUB)

Characteristic	Value
Operation accuracy	±1.5% of the set value or ±0.002 × U_n
Reset ratio	Typically 0.96

23.28.8 Voltage unbalance (VSQVUB) main settings

Table 254: Voltage unbalance (VSQVUB) main settings

Parameter	Function	Value (Range)	Step
Operation	VSQVUB	1 = on 5 = off	-
Unb detection method	VSQVUB	1 = Neg Seq 2 = Zero Seq 3 = Neg to Pos Seq 4 = Zero to Pos Seq 5 = Ph vectors Comp	-

23.29 Logging functions

23.29.1 Disturbance recorder, common functionality (RDRE) main settings

Table 255: Disturbance recorder, common functionality (RDRE) main settings

Parameter	function	Value (Range)	Step
Record length	RDRE	10...500 cycles	1
Pre-trg length	RDRE	0...100%	1
Operation mode	RDRE	1 = Overwrite 2 = Saturation	-
Storage rate	RDRE	32, 16, 8 samples per fundamental cycle	-

23.30 Other functionality

23.30.1 Pulse timer, eight channels (PTGAPC)

Table 256: Pulse timer, eight channels (PTGAPC)

Characteristic	Value
Operate time accuracy	±1.0% of the set value or ±20 ms

23.30.2 Time delay off, eight channels (TOFPAGC)

Table 257: Time delay off, eight channels (TOFPAGC)

Characteristic	Value
Operate time accuracy	±1.0% of the set value or ±20 ms

23.30.3 Time delay on, eight channels (TONGAPC)

Table 258: Time delay on, eight channels (TONGAPC)

Characteristic	Value
Operate time accuracy	±1.0% of the set value or ±20 ms

24. Mounting methods

With appropriate mounting accessories, the protection relay can be rack mounted, wall mounted, roof mounted or door mounted.

Mounting options for the relay standard size relay:

- Flush mounting
- Semi-flush mounting
- Semi-flush mounting the protection relay inclined (25°)
- Rack mounting
- Wall mounting
- Mounting to a 19" equipment frame
- Mounting with an RTXP 18 test switch to a 19" rack

Mounting options for the wide size relay:

- Flush mounting
- Semi-flush mounting
- Semi-flush mounting the protection relay inclined (25°)
- Rack mounting
- Wall mounting
- Mounting to a 19" equipment frame
- Mounting with an RTXP 24 test switch to a 19" rack

25. Selection and ordering data

Relays online (ROL), a Next-Generation Order Number Tool, supports order code creation for ABB Distribution Automation products with emphasis on, but not exclusively for, the Relion product family. ROL is an easy-to-use, online tool always containing the latest product information. The complete order code can be created with detailed specification and the result can be printed and mailed. Registration is required.

In case the relay will be exposed to harsh environmental conditions; like high humidity, chemicals or other corrosive agents, we recommend using the conformal coated relay versions.

26. Product HMI languages

REX615 is global product and includes multiple HMI languages. Amount of HMI languages will improve during the lifetime, and it is possible to update language content when new languages are available.

27. Modification Sales

Modification Sales is a concept that provides modification support for already delivered relays. Under Modification Sales it is possible to modify both the hardware and software capabilities of the existing relay. The same options are available as when a new relay variant is configured and ordered from the factory: it is possible to add new hardware modules into empty slots, change the type of the existing modules within the slots or add software functions by adding application and, if necessary, add-on packages. If it is needed to use the possibilities provided by the Modification Sales concept, please contact your local ABB unit. The information that is requested by ABB is a) Relay serial number, b) Relay order code and c) The requested modification, separately stated for each relay.

Modification Sales is based on license handling within the relay. Modifying the relay without proper new license from ABB puts the relay in internal relay failure mode.

28. Accessories and ordering data

Table 259: Cables

Item	Order number
Optical sensor for arc protection, cable length 1.5 m (4.9 ft)	1MRS120534-1.5
Optical sensor for arc protection, cable length 3.0 m (9.8 ft)	1MRS120534-3
Optical sensor for arc protection, cable length 5.0 m (16.4 ft)	1MRS120534-5

Table continues on the next page

Item	Order number
Optical sensor for arc protection, cable length 7.0 m (23 ft)	1MRS120534-7
Optical sensor for arc protection, cable length 10.0 m (32.8 ft)	1MRS120534-10
Optical sensor for arc protection, cable length 15.0 m (49.2 ft)	1MRS120534-15
Optical sensor for arc protection, cable length 20.0 m (65.6 ft)	1MRS120534-20
Optical sensor for arc protection, cable length 25.0 m (82 ft)	1MRS120534-25
Optical sensor for arc protection, cable length 30.0 m (98.4 ft)	1MRS120534-30
Optical sensor for arc protection, cable length 40.0 m (131.2 ft)	1MRS120534-40
Optical sensor for arc protection, cable length 50.0 m (164 ft)	1MRS120534-50

Table 260: Mounting accessories for standard size relay

Item	Order number
Semi-flush mounting kit	1MRS050696
Wall mounting kit	1MRS050697
Inclined semi-flush mounting kit	1MRS050831
19” rack mounting kit with cut-out for one relay	1MRS050694
19” rack mounting kit with cut-out for two relays	1MRS050695
Mounting bracket for one relay with test switch RTXP in 4U Combiflex (RHGT 19” variant C)	2RCA022642P0001
Mounting bracket for one relay in 4U Combiflex (RHGT 19” variant C)	2RCA022643P0001
19” rack mounting kit for one relay and one RTXP18 test switch (the test switch is not included in the delivery)	2RCA021952A0003
19” rack mounting kit for one relay and one RTXP24 test switch (the test switch is not included in the delivery)	2RCA022561A0003
Functional earthing flange for RTD modules[174]	2RCA036978A0001
Replacement kit for a Strömberg SP_J40 series relay (cut-out in the center of the installation plate)	2RCA027871A0001
Replacement kit for a Strömberg SP_J40 series relay (cut-out on the left or the right of the installation plate)	2RCA027874A0001
Replacement kit for two Strömberg SP_J3 series relays	2RCA027880A0001
19” rack replacement kit for Strömberg SP_J3/J6 series relays (one cut-out)	2RCA027894A0001
19” rack replacement kit for Strömberg SP_J3/J6 series relays (two cut-outs)	2RCA027897A0001
Replacement kit for a Strömberg SP_J6 series relay	2RCA027881A0001
Replacement kit for three BBC S_ series relays	2RCA027882A0001
Replacement kit for a SPA 300 series relay	2RCA027885A0001
Protection cover kit	2RCA027998A0001

[174] Cannot be used when the protection relay is mounted with the Combiflex 19" equipment frame (2RCA032826A0001)

Table 261: Mounting accessories for wide size relay

Item	Order number
Semi-flush mounting kit	2RCA030573A0001
Inclined semi-flush mounting kit	2RCA054775A0001
Wall mounting kit	2RCA030894A0001
19” rack mounting kit with cut-out for one relay	2RCA031135A0001
19” rack mounting kit for one relay and one RTXP24 test switch (the test switch and wire harness are not included in the delivery)	2RCA032818A0001
Mounting bracket for one relay with test switch RTXP in 4U Combiflex (RHGT 19” variant C) (the test switch, wire harness and Combiflex RGHT 19" variant C are not included in the delivery)	2RCA032826A0001
Functional earthing flange for RTD modules[175]	2RCA036978A0001
Protection cover kit	2RCA030963A0001

29. Tools

The protection relay is delivered with the correct protection and control functionality included but it needs engineering to fit in the needed application. The default parameter setting values can be changed from the LHMI, the Web browser-based user interface (Web HMI) or Protection and Control IED Manager PCM600 in combination with the relay specific connectivity package.

PCM600 offers extensive relay configuration functions. For example, the setting parameters, relay application, graphical display and IEC 61850 communication, including horizontal GOOSE communication, can be configured with PCM600.

When the Web HMI is used, the protection relay can be accessed from any of the relay’s access points, including the Ethernet connection on the LHMI. For security reasons, the Web HMI is disabled by default, but it can be enabled via the LHMI. The Web HMI functionality can be limited to read-only access.

Table 262: Tools

Description	Version
PCM600	2.14 HF4 or later
Web browser	Microsoft Edge, Google Chrome and Mozilla Firefox
REX615 connectivity package	6.3.0 or later

Table 263: Supported functions

Function	Web HMI	PCM600
Relay parameter setting	•	•
Saving of relay parameter settings in the relay	•	•

Table continues on the next page

[175] Cannot be used when the protection relay is mounted with the Combiflex 19" equipment frame (2RCA032826A0001)

Function	Web HMI	PCM600
Signal monitoring	●	●
Disturbance recorder handling	●	●
Alarm LED viewing	●	●
Access control management	●	●
Relay signal configuration (Signal Matrix)	-	●
Modbus® communication configuration (communication management)	-	●
DNP3 communication configuration (communication management)	-	●
IEC 60870-5-103 communication configuration (communication management)	-	●
Saving of relay parameter settings in the tool	-	●
Disturbance record analysis	-	●
XRIO parameter export/import	●	●
Graphical display configuration	-	●
Application configuration	-	●
IEC 61850 communication configuration, GOOSE (communication configuration)	-	●
Phasor diagram viewing	●	-
Event viewing	●	●
Saving of event data on the user's PC	●	●
Online monitoring	-	●
SMV and GOOSE diagnostics on Web HMI	-	●

● = Supported

The relay connectivity package is a collection of software and specific relay information which enables system products and tools to connect and interact with the protection relay. The connectivity packages reduce the risk of errors in system integration, minimizing device configuration and setup times.

Further, the connectivity package for REX615 includes a flexible update tool and new functionalities to the protection relay. The flexible modification support of the relay enables adding new protection functionalities whenever the protection and control needs are changing.

30. Module diagrams

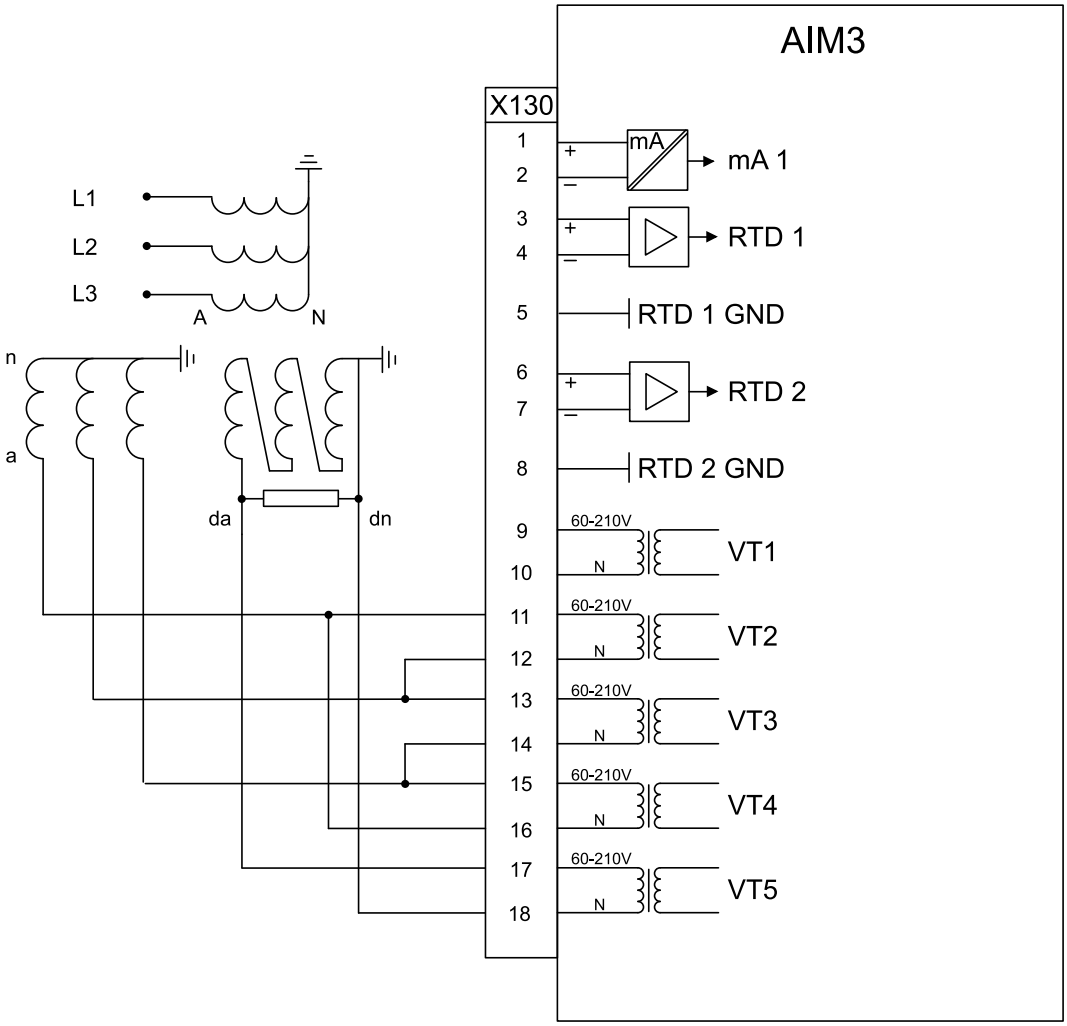

Figure 18: AIM3 module

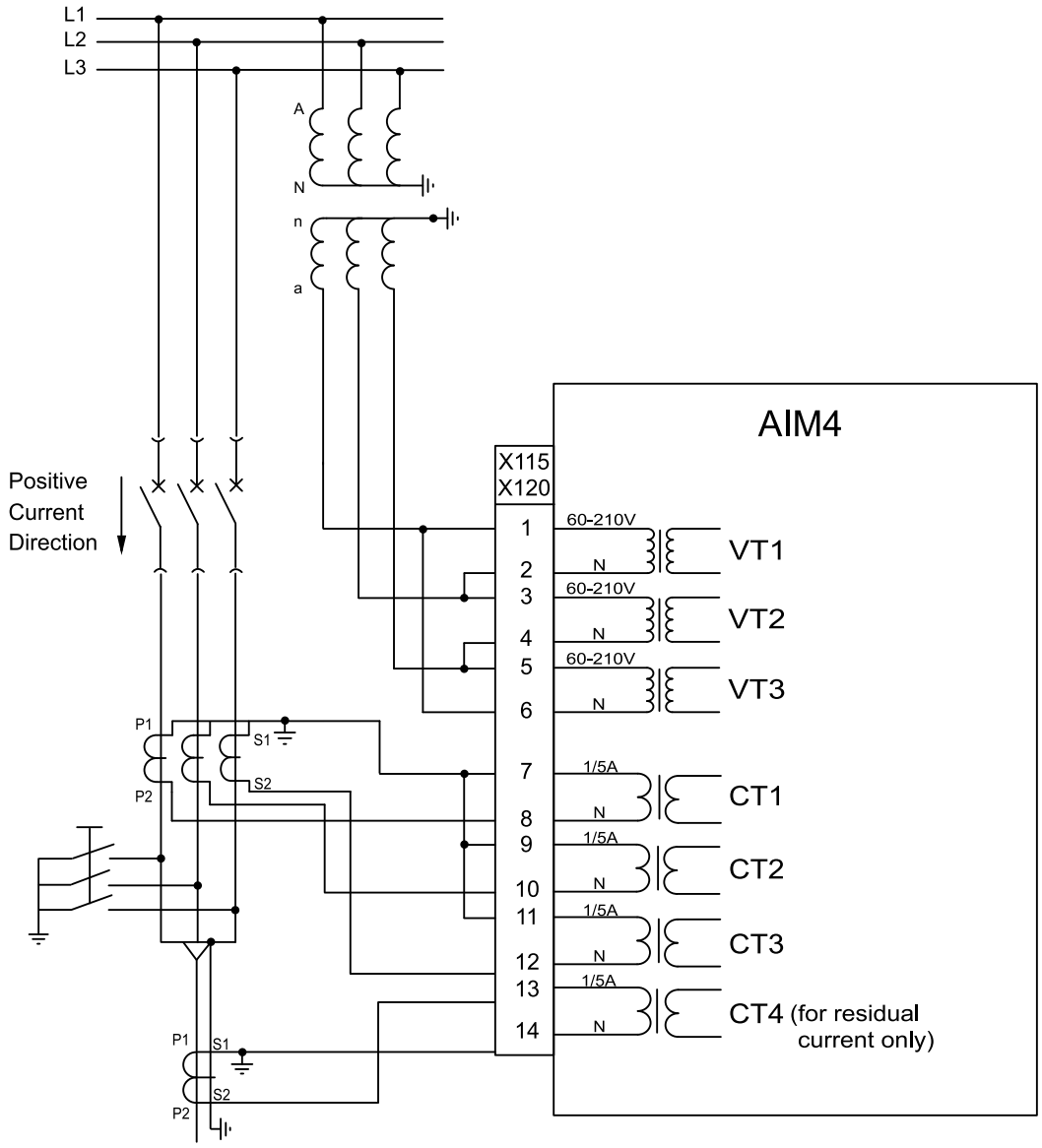

Figure 19: AIM4 module

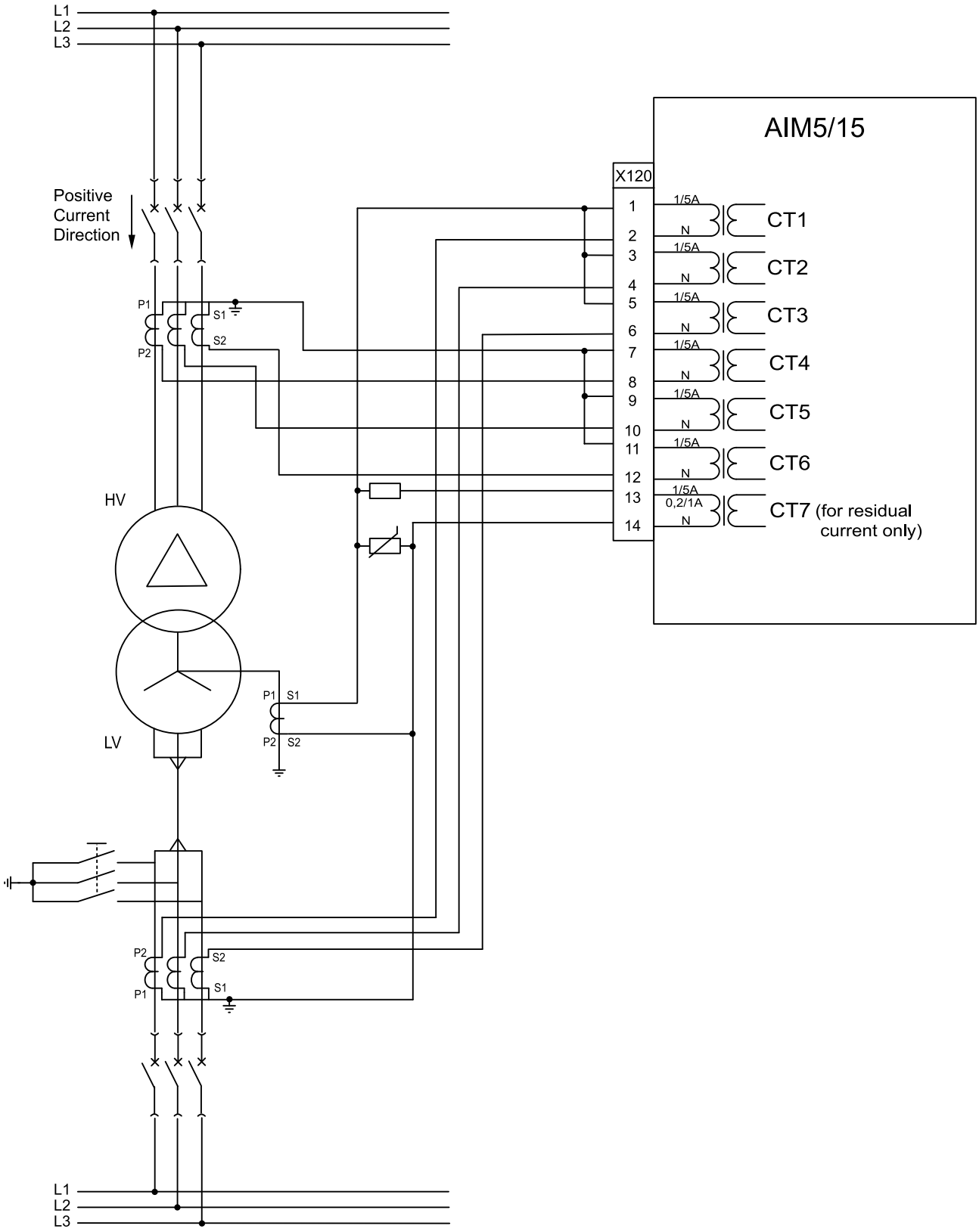

Figure 20: AIM5 and AIM15 module (high-impedance restricted earth-fault)

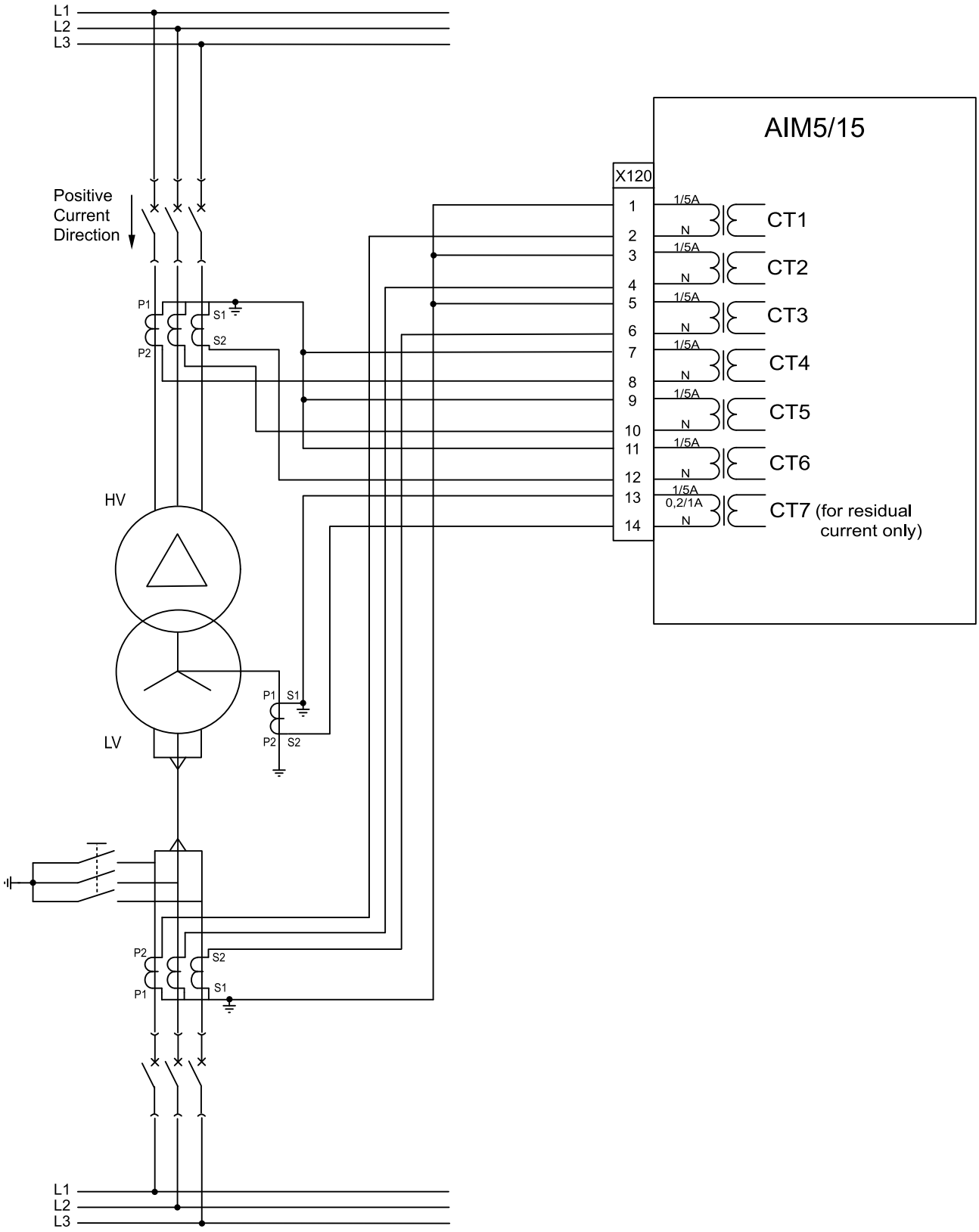

Figure 21: AIM5 and AIM15 module (low-impedance restricted earth-fault)

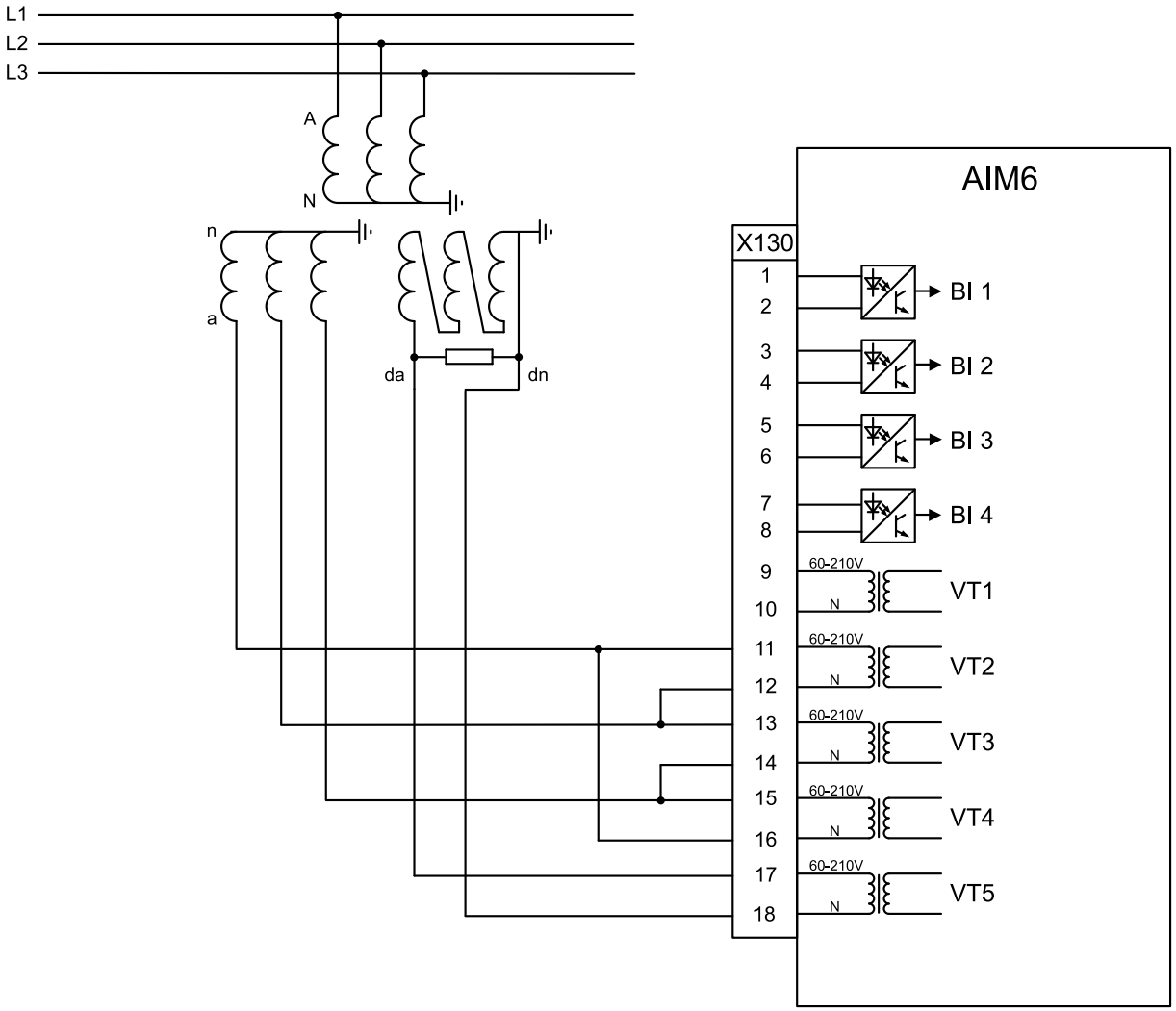

Figure 22: AIM6 module

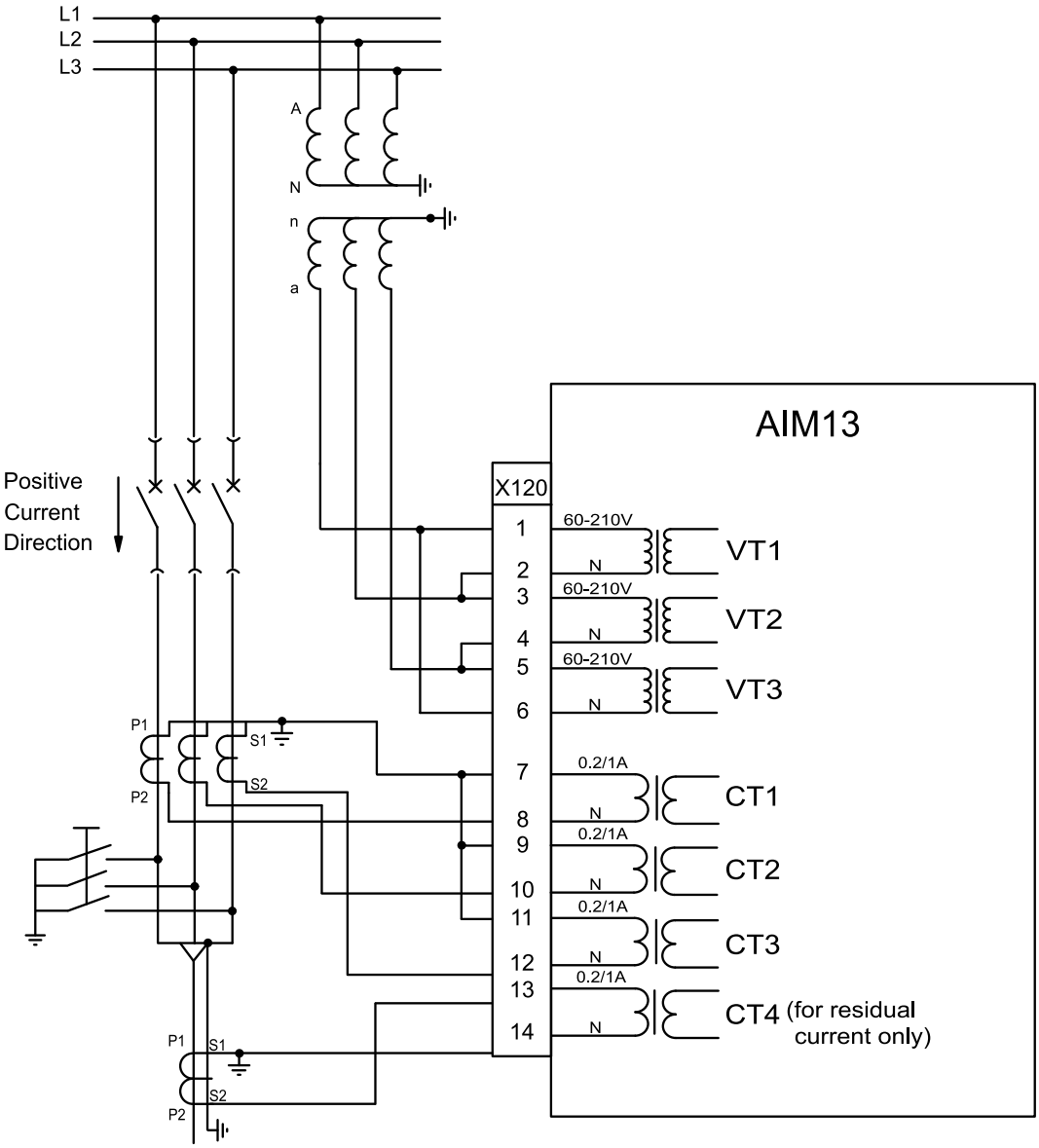

Figure 23: Example of AIM13 card variant (4 I + 3 U with 0.2/1A Io channel)

AIM16: CT4 1/5A inputs, AIM17: CT4 0.2/1A inputs

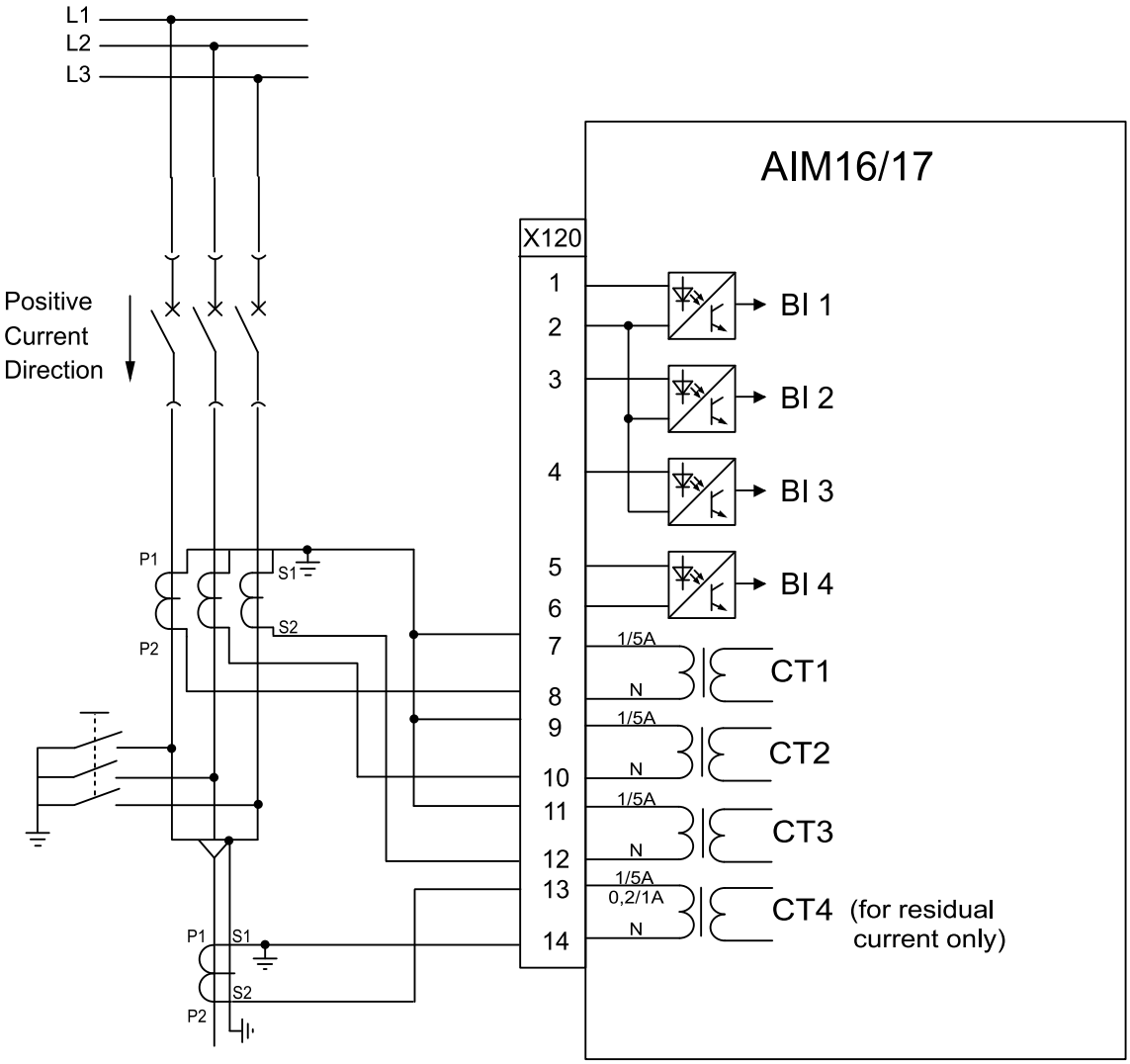

Figure 24: AIM16 and AIM17 module (depending on residual current input sensitivity)

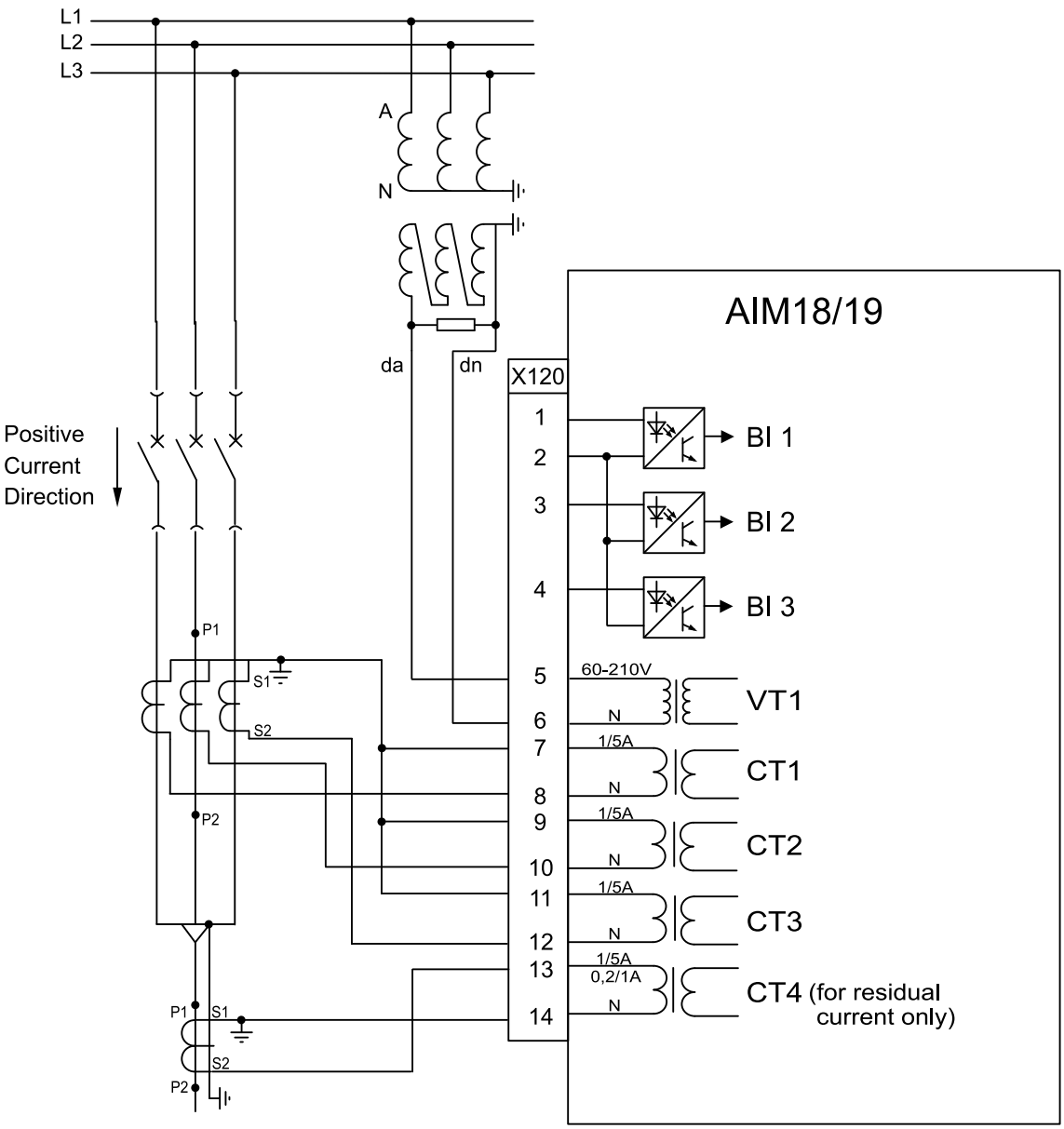

Figure 25: AIM18 and AIM19 module (depending on residual current input sensitivity)

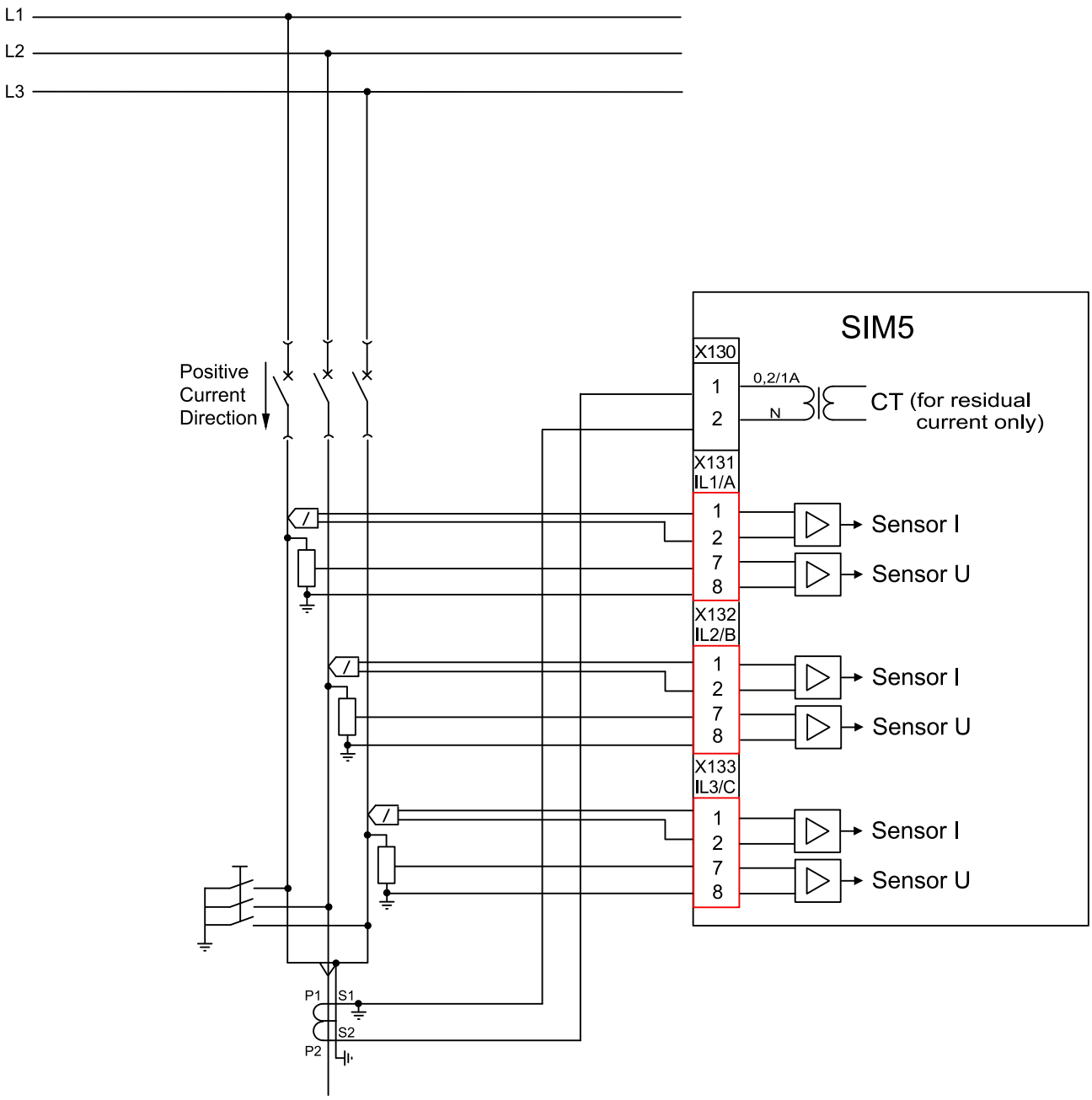

Figure 26: SIM5 module

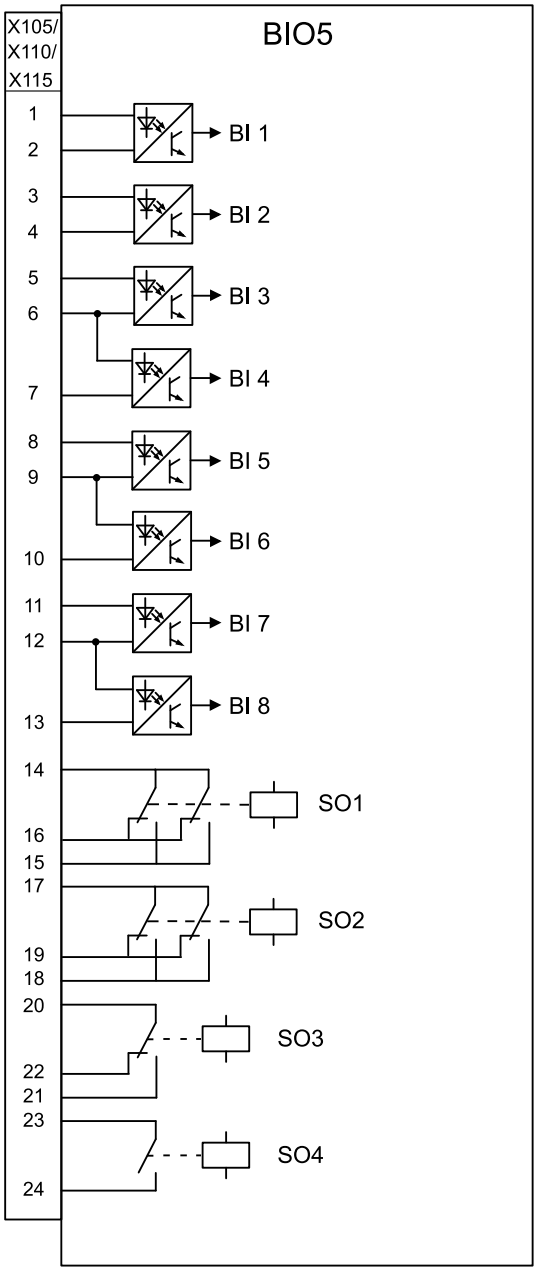

Figure 27: BIO5 module

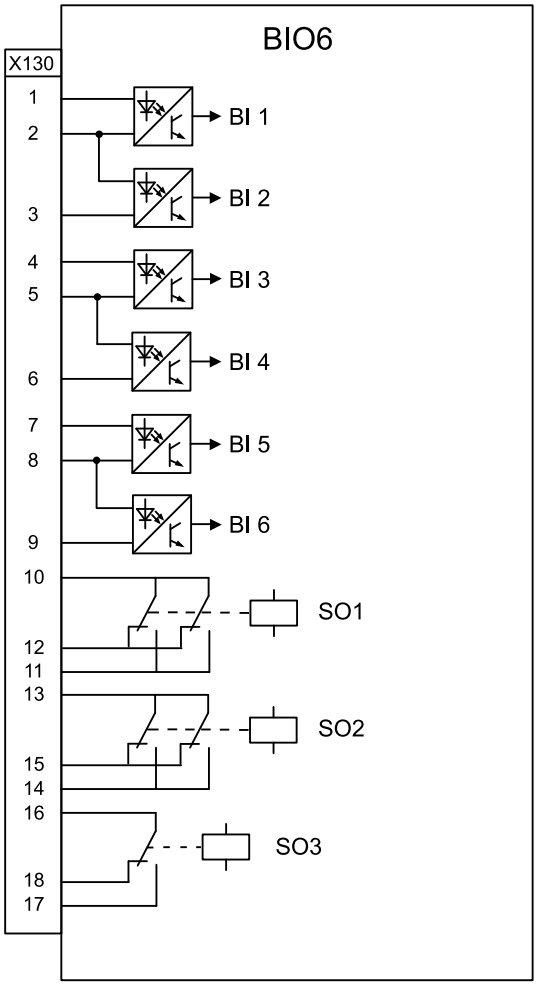

Figure 28: BIO6 module

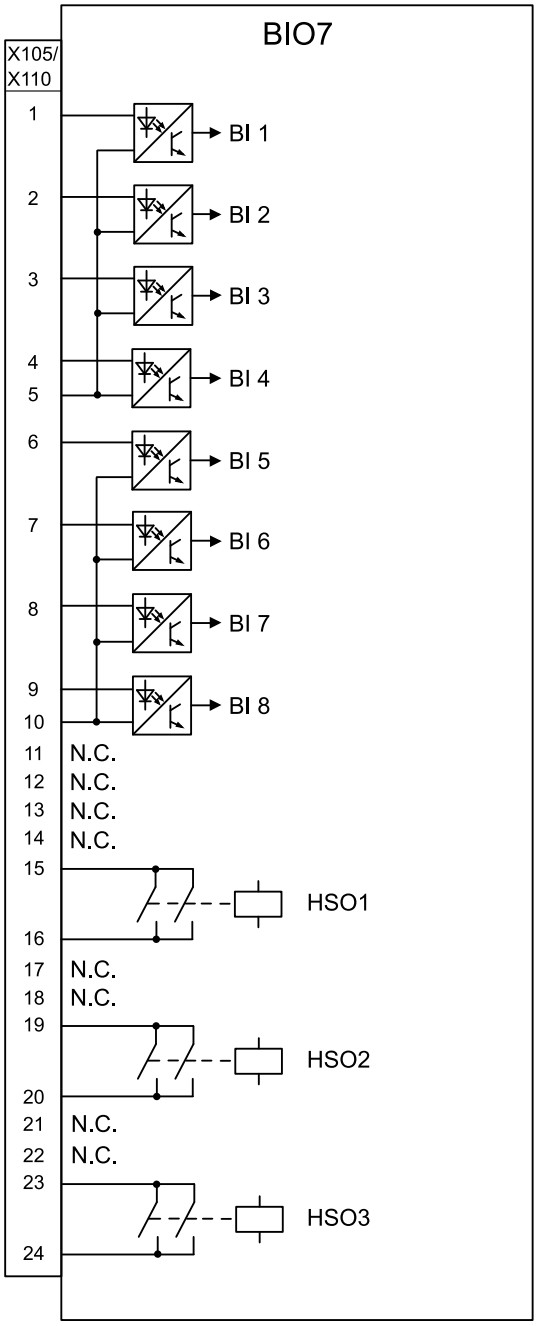

Figure 29: BIO7 module

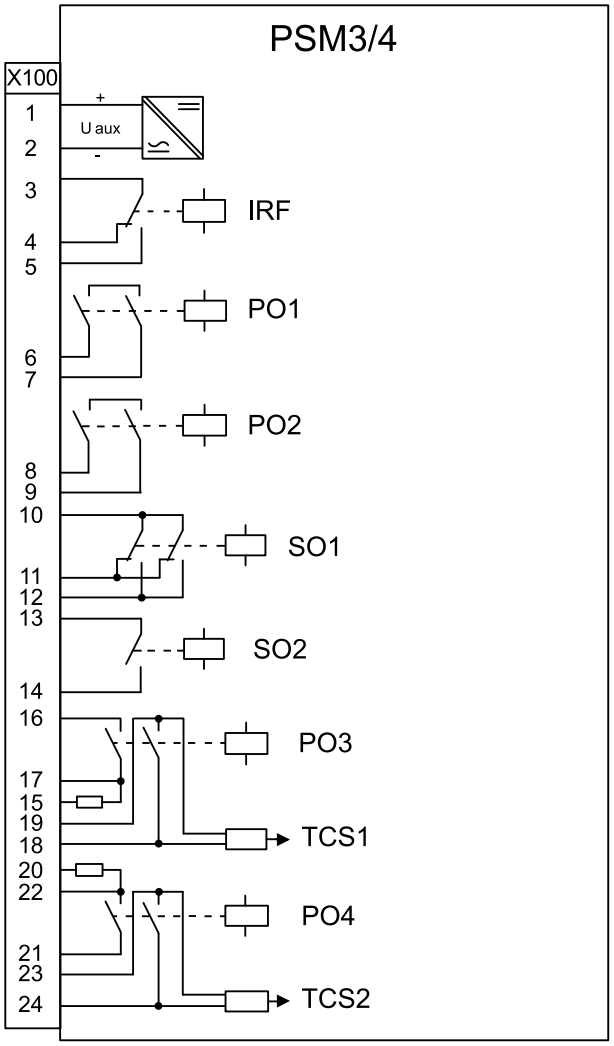

Figure 30: PSM3 and PSM4 module (depending on power supply nominal auxiliary voltage)

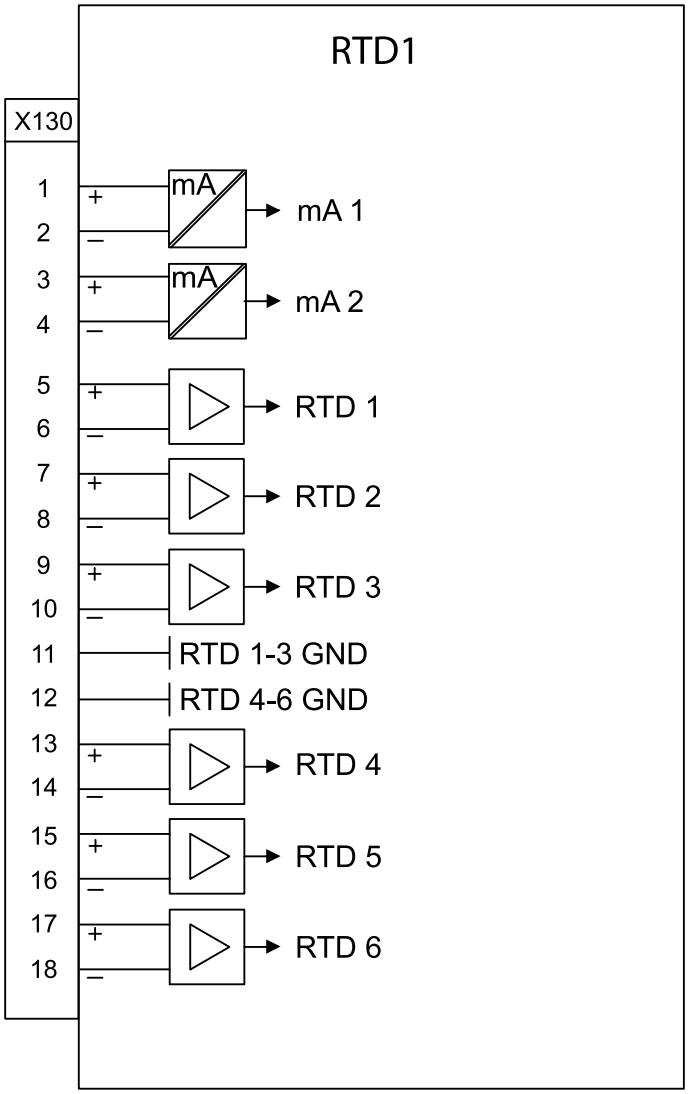

Figure 31: RTD1 module

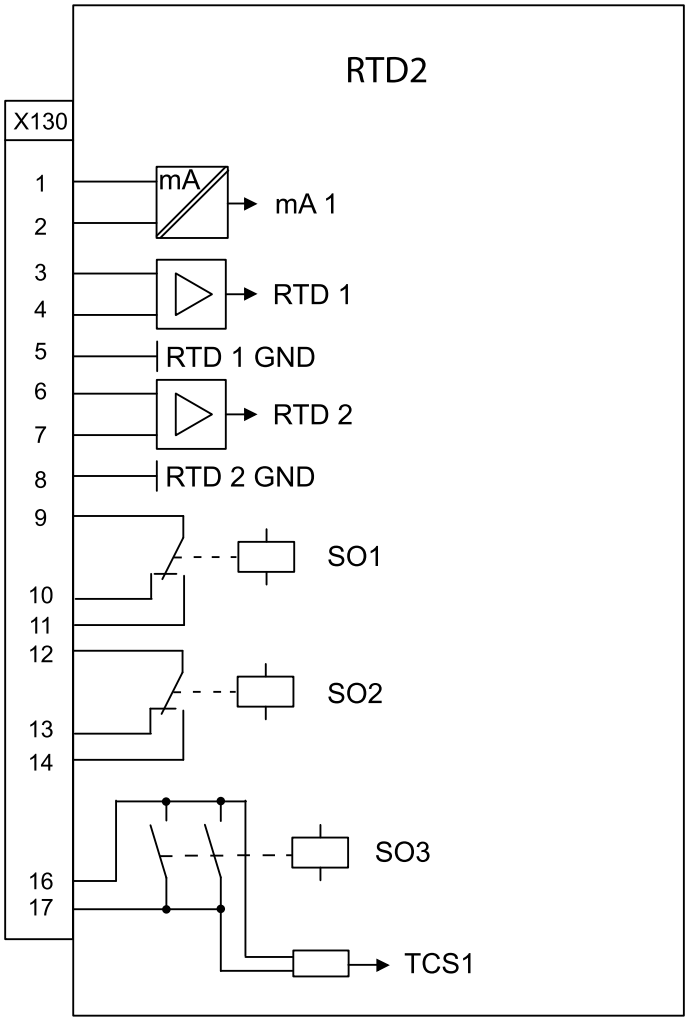

Figure 32: RTD2 module

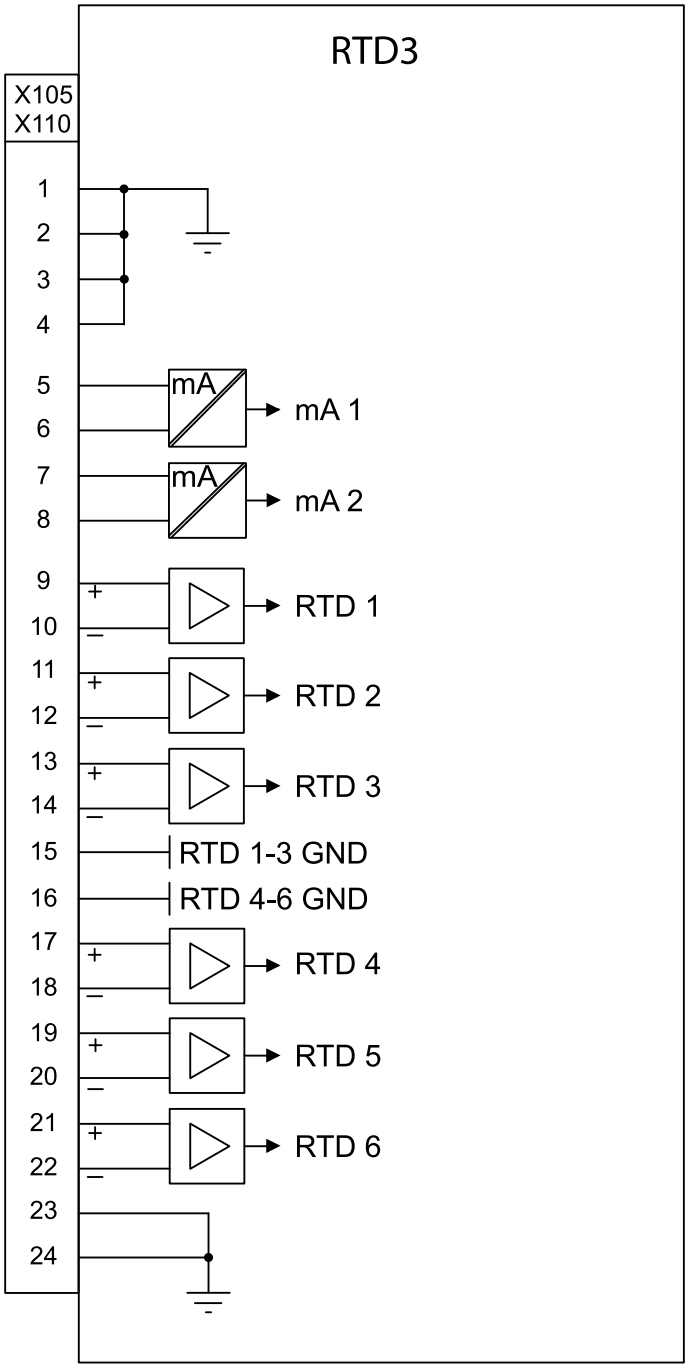

Figure 33: RTD3 module

31. Certificates

DNV GL has issued an IEC 61850 Edition 2 with Amendment 1 Certificate Level A1 for REX615 Protection and Control relay.

Additional certificates can be found on the REX615 product page.

32. References

The *new.abb.com/medium-voltage/digital-substations* portal provides information on the entire range of distribution automation products and services.

The latest relevant information on the REX615 protection and control relay is found on the

REX615 product page. Scroll down the page to find and download the related documentation.

33. REX615 Functions, codes and symbols

Table 264: REX615 Functions included in the relay

Function	IEC 61850	IEC 60617	ANSI
Protection			
Distance protection	DSTPDIS	Z<	21P,21N
Local acceleration logic	DSTPLAL	LAL	21LAL
Scheme communication logic	DSOCPSCH	CL	85 21SCHLGC
Current reversal and weak-end infeed logic	CRWPSCH	CLCRW	85 21CREV,WEI
Communication logic for residual overcurrent	RESCPSCH	CLN	85 67G/N SCHLGC
Current reversal and weak-end infeed logic for residual overcurrent	RCRWPSCH	CLCRWN	85 67G/N CREV,WEI
Power swing detection	DSTRPSB	Zpsb	68
Line differential protection with inzone power transformer	LNPLDF	3Id/I>	87L
Line differential protection (SMV based)	LN2PLDF	3Id/I> SMV/2T	87L SMV/2T
Binary signal transfer	BSTGAPC	BST	BST
Switch-onto-fault protection	CVPSOF	CVPSOF	SOTF
Three-phase non-directional overcurrent protection, low stage	PHLPTOC	3I>	51P-1
Three-phase non-directional overcurrent protection, high stage	PHHPTOC	3I>>	51P-2
Three-phase non-directional overcurrent protection, instantaneous or definite time stage	PHIPTOC	3I>>>	50P/51P
Three-phase non-directional long time overcurrent protection	PHLTPTOC	3I>	51LT
Three-phase non-directional overcurrent protection, instantaneous only stage	PHIPIOC	3I>>>>	50P
Three-independent-phase non-directional overcurrent protection, low stage	PH3LPTOC	3I_3>	51P_3-1
Three-independent-phase non-directional overcurrent protection, high stage	PH3HPTOC	3I_3>>	51P_3-2
Three-independent-phase non-directional overcurrent protection, instantaneous or definite time stage	PH3IPTOC	3I_3>>>	50P_3/51P_3
Three-phase directional overcurrent protection, low stage	DPHLPDOC	3I> ->	67P/51P-1
Three-phase directional overcurrent protection, high stage	DPHHPDOC	3I>> ->	67P/51P-2
Directional three-independent-phase directional overcurrent protection, low stage	DPH3LPDOC	3I_3> ->	67P_3/51P_3-1

Table continues on the next page

Function	IEC 61850	IEC 60617	ANSI
Directional three-independent-phase directional overcurrent protection, high stage	DPH3HPDOC	3I_3>> ->	67P_3/51P_3-2
Non-directional earth-fault protection, low stage	EFLPTOC	Io>	51G/51N-1
Non-directional earth-fault protection, high stage	EFHPTOC	Io>>	51G/51N-2
Non-directional earth-fault protection, instantaneous stage	EFIPTOC	Io>>>	50G/N,51G/N
Non-directional earth-fault protection, instantaneous only stage	EFIPIOC	Io>>>>	50G/50N
Directional earth-fault protection, low stage	DEFLPDEF	Io> ->	67G/N-1 51G/N-1
Directional earth-fault protection, high stage	DEFHPDEF	Io>> ->	67G/N-1 51G/N-2
Three-phase power directional element	DPSRDIR	I1 ->	67P-TC
Neutral power directional element	DNZSRDIR	I2 ->, Io ->	67N-TC
Admittance-based earth-fault protection	EFPADM	Yo> ->	21NY
Multifrequency admittance-based earth-fault protection	MFADPSDE	Io> -> Y	67NYH
Wattmetric-based earth-fault protection	WPWDE	Po> ->	32N
Transient/intermittent earth-fault protection	INTRPTEF	Io> -> IEF	67NTEF/NIEF
Harmonics-based earth-fault protection	HAEFPTOC	Io>HA	51NH
Touch voltage based earth-fault current protection	IFPTOC	IF>/UT>	46SNQ/59N
Negative-sequence overcurrent protection	NSPTOC	I2>	46
Directional negative-sequence overcurrent protection	DNSPDOC	I2> ->	67Q
Phase discontinuity protection	PDNSPTOC	I2/I1>	46PD
Residual overvoltage protection	ROVPTOV	Uo>	59G/59N
Three-phase undervoltage protection	PHPTUV	3U<	27
Single-phase undervoltage protection	PHAPTUV	U_A<	27_A
Three-phase overvoltage variation protection	PHVPTOV	3Urms>	59.S1
Three-phase overvoltage protection	PHPTOV	3U>	59
Single-phase overvoltage protection	PHAPTOV	U_A>	59_A
Positive-sequence overvoltage protection	PSPTOV	U1>	59PS
Positive-sequence undervoltage protection	PSPTUV	U1<	27PS
Negative-sequence overvoltage protection	NSPTOV	U2>	59NS
Frequency protection	FRPFRQ	f>/f<, df/dt	81
Three-phase voltage-dependent overcurrent protection	PHPVOC	3I(U)>	51V
Overexcitation protection	OEPVPH	U/f>	24

Table continues on the next page

Function	IEC 61850	IEC 60617	ANSI
Three-phase thermal protection for feeders, cables and distribution transformers	T1PTTR	3Ith>F	49F
Three-phase thermal overload protection, two time constants	T2PTTR	3Ith>T/G/C	49T/G/C
Three-phase overload protection for shunt capacitor banks	COLPTOC	3I> 3I<	51, 37, 86C
Current unbalance protection for shunt capacitor banks	CUBPTOC	dI>C	60N
Three-phase current unbalance protection for shunt capacitor banks	HCUBPTOC	3dI>C	60P
Shunt capacitor bank switching resonance protection, current based	SRCPTOC	TD>	55ITHD
Compensated neutral unbalance voltage protection	CNUPTOV	CNU>	59NU
Phase voltage differential protection for shunt capacitor banks	CPHPTDV	3dU>	87V
Low-voltage ride-through protection	LVRTPTUV	U<RT	27RT
Voltage vector shift protection	VVSPPAM	VS	78VS
Directional reactive power undervoltage protection	DQPTUV	Q> ->, 3U<	32Q, 27
Reverse power/directional overpower protection	DOPPDPR	P>/Q>	32R/32O
Underpower protection	DUPPDPR	P<	32U
Three-phase underimpedance protection	UZPDIS	Z<G	21G
Directional negative sequence impedance protection	DNZPDIS	Z2 ->	Z2Q
Three-phase underexcitation protection	UEXPDIS	X<	40
Third harmonic-based stator earth-fault protection	H3EFPSEF	dUo>/Uo3H	64TN
Rotor earth-fault protection (injection method)	MREFPTOC	Io>R	64R
Thermal overload protection for rotors	RPTTR	3Ith>R	49R
High-impedance or flux-balance based differential protection	MHZPDIF	3dIHi>M	87HIM
Out-of-step protection with double blinders	OOSRPSB	OOS	78PS
Negative-sequence overcurrent protection for machines	MNSPTOC	I2>M	46M
Loss of phase (undercurrent)	PHPTUC	3I<	37
Loss of load supervision	LOFLPTUC	3I<	37
Motor load jam protection	JAMPTOC	Ist>	50TDJAM
Motor start-up supervision	STTPMSU	Is2t n<	49, 66, 48, 50TDLR
Motor start counter	MSCPMRI	n<	66
Phase reversal protection	PREVPTOC	I2>>	46R
Thermal overload protection for motors	MPTTR	3Ith>M	49M

Table continues on the next page

Function	IEC 61850	IEC 60617	ANSI
Stabilized and instantaneous differential protection for machines	MPDIF	3dI>M/G	87M/87G
Underpower factor protection	MPUPF	PF<	55U
Stabilized and instantaneous differential protection for two-winding transformers	TR2PTDF	3dI>T	87T
Numerical stabilized low-impedance restricted earth-fault protection	LREFPNDF	dIoLo>	87NLI
High-impedance based restricted earth-fault protection	HREFPDIF	dIoHi>	87NHI
High-impedance differential protection for phase A	HIAPDIF	dHi_A>	87_A
High-impedance differential protection for phase B	HIBPDIF	dHi_B>	87_B
High-impedance differential protection for phase C	HICPDIF	dHi_C>	87_C
Circuit breaker failure protection	CCBRBRF	3I>/Io>BF	50BF
Three-phase inrush detector	INRPHAR	3I2f>	68HB
Residual current inrush detector	RINRPHAR	Io2f>	68HBG/N
Master trip	TRPPTRC	Master Trip	94/86
Arc protection	ARCSARC	ARC	AFD
High-impedance fault detection	PHIZ	HIF	HIZ
Fault locator	SCEFRFLO	FLOC	FLOC
Load-shedding and restoration	LSHDPFRQ	UFLS/R	81LSH
Load shedding step selector	LSHDGAPC	LSHDGAPC	LSHDGAPC
Multipurpose protection	MAPGAPC	MAP	MAP
Accidental energization protection	GAEPVOC	U<, I>	27/50
Load blinder	LBRDOB	LB	21LB
Cable Fault Detection	RCFD	CFD	CFD
Cable end protection	CEPNDF	dIo>	87N
Cold load pickup	CLPGAPC	CLP	62CLD
Current disturbance detector	CDDPTOC	I>>>CDD	50DD
Faulty phase supervision for earth fault	FPHRPHS	FPS	FPS
Control			
Circuit-breaker control	CBXCBR	I <-> O CB	52
Disconnector control	DCXSWI	I <-> O DCC	29DS
Earthing switch control	ESXSWI	I <-> O ESC	29GS
Disconnector position indication	DCSXSWI	I <-> O DC	29DS
Earthing switch position indication	ESSXSWI	I <-> O ES	29GS

Table continues on the next page

Function	IEC 61850	IEC 60617	ANSI
Three-state disconnector position indication	P3SSXSWI	I<->O P3SS	29DS/GS
Emergency start-up	ESMGAPC	ESTART	EST, 62
Autoreclosing	DARREC	O -> I	79
Circuit breaker uncorresponding position start-up	UPCALH	CBUPS	52OU
Synchronism and energizing check	SECRSYN	SYNC	25
Tap changer control with voltage regulator, legacy	OLATCC	COLTC	90V
Tap changer control with voltage regulator	OL5ATCC	COLTC	90V
Transformer data combiner	OLGAPC	OLGAPC	OLGAPC
Tap changer position indication	TPOSYLTC	TPOSM	84T
Condition Monitoring and Supervision			
Circuit-breaker condition monitoring	SSCBR	CBCM	52CM
Motor controlled earthing switch and disconnector supervision	ESDCSSWI	ESDCCM	29CM
Hot-spot and insulation ageing rate monitoring for transformers	HSARSPTR	3Ihp>T	26/49HS
Trip circuit supervision	TCSSCBR	TCS	TCM
Current circuit supervision	CCSPVC	MCS 3I	CCM
Current circuit supervision for transformers	CTSRCTF	MCS 3I, I2	CCM 3I, I2
Current circuit supervision for line differential	LNCTSRCTF	MCS_L 3I, I2	CCM_L 3I, I2
Current transformer supervision for high-impedance protection scheme for phase A	HZCCASPVC	MCS I_A	CCM_A
Current transformer supervision for high-impedance protection scheme for phase B	HZCCBSPVC	MCS I_B	CCM_B
Current transformer supervision for high-impedance protection scheme for phase C	HZCCCSPVC	MCS I_C	CCM_C
Fuse failure supervision	SEQSPVC	FUSEF	VCM, 60
Protection communication supervision	PCSITPC	PCS	PCS
Runtime counter for machines and devices	MDSOPT	OPTS	OPTM
Three-phase remanent undervoltage supervision	MSVPR	3U<R	27R
Voltage presence	PHSVPR	PHSVPR	PHSVPR
Measurement			
Three-phase current measurement	CMMXU	3I	IA, IB, IC
Sequence current measurement	CSMSQI	I1, I2, I0	I1, I2, I0
Residual current measurement	RESCMMXU	Io	IG
Three-phase voltage measurement	VMMXU	3U	VA, VB, VC

Table continues on the next page

Function	IEC 61850	IEC 60617	ANSI
Single-phase voltage measurement	VAMMXU	U_A	V_A
Phase voltage measurement	VPHMMXU	3UL	VL
Residual voltage measurement	RESVMMXU	Uo	VG/VN
Sequence voltage measurement	VSMSQI	U1, U2, U0	V1, V2, V0
Three-phase power and energy measurement	PEMMXU	P, E	P, E
Single-phase power and energy measurement	SPEMMXU	P_A, E_A	P_A, E_A
Load profile recorder	LDPRLRC	LOADPROF	LOADPROF
Frequency measurement	FMMXU	f	f
Frequency adaptiveness (10-70Hz)			
Power Quality			
Current total demand, harmonic distortion, DC component (TDD, THD, DC) and individual harmonics	CHMHAI	PQM3IH	PQM ITHD, IDC
Voltage total harmonic distortion, DC component (THD, DC) and individual harmonics	VHMHAI	PQM3VH	PQM VTHD, VDC
Voltage variation	PHQVVR	PQMU	PQMV SWE, SAG, INT
Voltage unbalance	VSQVUB	PQUUB	PQMV UB
Traditional LED indication			
LED indication control	LEDPTRC	LEDPTRC	LEDPTRC
Individual programmable LED control	LED	LED	LED
Logging functions			
Disturbance recorder (common functionality)	RDRE	DR	DFR
Disturbance recorder, analog channels 1...12	A1RADR	A1RADR	A1RADR
Disturbance recorder, binary channels 1...32	B1RBDR	B1RBDR	B1RBDR
Disturbance recorder, binary channels 33...64	B2RBDR	B2RBDR	B2RBDR
Fault recorder	FLTRFRC	FAULTREC	FR
Sequence event recorder	SER	SER	SER
Other functionality			
Programmable buttons (16 buttons)	FKEYGGIO	FKEY	FKEY
Programmable buttons (4 buttons)	FKEY4GGIO	FKEY	FKEY
Parameter setting groups	PROTECTION	PROTECTION	PROTECTION
Time master supervision	GNRLLTMS	TSYNC	TSYNC
FTP configuration	FTPLPRT	FTPLPRT	FTPLPRT

Table continues on the next page

Function	IEC 61850	IEC 60617	ANSI
HTTP configuration	HTTPLPRT	HTTPLPRT	HTTPLPRT
HMI device	HMILDEV	HMILDEV	HMILDEV
IEC 61850-1 MMS	MMSLPRT	MMS	MMS
IEC 61850-1 GOOSE	GSELPRT	GSE	GSE
IEC 60870-5-103 protocol	I3CLPRT	I3C	I3C
IEC 60870-5-104 protocol	I5CLPRT	I5C	I5C
DNP3 protocol	DNPLPRT	DNP 3.0	DNP 3.0
Modbus protocol (slave)	MBSLPRT	MBS	MBS
Modbus protocol (master)	MBMLPRT	MBM	MBM
Received Modbus binary value	MMVGAPC	MMV	MMV
Received Modbus 32-bit integer value	MMVI4GAPC	MMVI4	MMVI4
Received Modbus measured value	MMVF4GAPC	MMVF4	MMVF4
OR gate with two inputs	OR	OR	OR
OR gate with six inputs	OR6	OR6	OR6
OR gate with twenty inputs	OR20	OR20	OR20
AND gate with two inputs	AND	AND	AND
AND gate with six inputs	AND6	AND6	AND6
AND gate with twenty inputs	AND20	AND20	AND20
XOR gate with two inputs	XOR	XOR	XOR
NOT gate	NOT	NOT	NOT
Real maximum value selector	MAX3R	MAX3R	MAX3R
Real minimum value selector	MIN3R	MIN3R	MIN3R
Rising edge detector	R_TRIG	R_TRIG	R_TRIG
Falling edge detector	F_TRIG	F_TRIG	F_TRIG
Real switch selector	SWITCHR	SWITCHR	SWITCHR
Integer 32-bit switch selector	SWITCHI32	SWITCHI32	SWITCHI32
SR flip-flop, volatile	SR	SR	SR
RS flip-flop, volatile	RS	RS	RS
Minimum pulse timer, two channels	TPGAPC	TP	62TP
Minimum pulse timer second resolution, two channels	TPSGAPC	TPS	62TPS
Minimum pulse timer minutes resolution, two channels	TPMGAPC	TPM	62TPM
Pulse timer, eight channels	PTGAPC	PT	62PT

Table continues on the next page

Function	IEC 61850	IEC 60617	ANSI
Time delay off, eight channels	TOFGAPC	TOF	62TOF
Time delay on, eight channels	TONGAPC	TON	62TON
Daily timer	DTMGAPC	DTM	DTM
Calendar function	CALGAPC	CAL	CAL
SR flip-flop, eight channels, nonvolatile	SRGAPC	SR	SR
Boolean value event creation	MVGAPC	MV	MV
Integer value event creation	MVI4GAPC	MVI4	MVI4
Analog value event creation with scaling	SCA4GAPC	SCA4	SCA4
Generic control points	SPCGAPC	SPC	SPCG
Remote generic control points	SPCRGAPC	SPCR	SPCR
Local generic control points	SPCLGAPC	SPCL	SPCL
Integer control status	INCGAPC	INC	INC
Generic up-down counter	UDFCNT	UDCNT	UDCNT
Local/Remote control	CONTROL	CONTROL	CONTROL
Real addition	ADDR	ADDR	ADDR
Real subtraction	SUBR	SUBR	SUBR
Real multiplication	MULR	MULR	MULR
Real division	DIVR	DIVR	DIVR
Real equal comparator	EQR	EQR	EQR
Real not equal comparator	NER	NER	NER
Real greater than or equal comparator	GER	GER	GER
Real less than or equal comparator	LER	LER	LER
Minimum, maximum and average value calculator	MINMAXAVE12R	MINMAXAVE12R	MINMAXAVE12R
Voltage switch	VMSWI	VSWI	VSWI
Current sum	CMSUM	CSUM	CSUM
Current switch	CMSWI	CMSWI	CMSWI
Phase current preprocessing	ILTCTR	ILTCTR	ILTCTR
Residual current preprocessing	RESTCTR	RESTCTR	RESTCTR
Phase and residual voltage preprocessing	UTVTR	UTVTR	UTVTR
SMV stream receiver (16 channels)	SMVRCV	SMVRCV	SMVRCV
SMV stream sender (IEC 61850-9-2LE)	SMVSENDER	SMVSENDER	SMVSENDER
SMV stream sender (IEC 61869-9)	SMVSENDER61869	SMVSENDER61869	SMVSENDER61869

Table continues on the next page

Function	IEC 61850	IEC 60617	ANSI
SMV stream channel quality decoder	SMV_QUALITY	SMV_QUALITY	SMV_QUALITY
GOOSE Control Block Monitoring with LGOS LN (template)	GOLGOS	GOLGOS	GOLGOS
Redundant Ethernet channel supervision	RCHLCCH	RCHLCCH	RCHLCCH
Ethernet channel supervision	SCHLCCH	SCHLCCH	SCHLCCH
Received GOOSE binary information	GOOSERCV_BIN	GOOSERCV_BIN	GOOSERCV_BIN
Received GOOSE double binary information	GOOSERCV_DP	GOOSERCV_DP	GOOSERCV_DP
Received GOOSE measured value information	GOOSERCV_MV	GOOSERCV_MV	GOOSERCV_MV
Received GOOSE 8-bit integer value information	GOOSERCV_INT8	GOOSERCV_INT8	GOOSERCV_INT8
Received GOOSE 32-bit integer value information	GOOSERCV_INT32	GOOSERCV_INT32	GOOSERCV_INT32
Received GOOSE interlocking information	GOOSERCV_INTL	GOOSERCV_INTL	GOOSERCV_INTL
Received GOOSE measured value (phasor) information	GOOSERCV_CMV	GOOSERCV_CMV	GOOSERCV_CMV
Received GOOSE enumerator value information	GOOSERCV_ENUM	GOOSERCV_ENUM	GOOSERCV_ENUM
Bad signal quality	QTY_BAD	QTY_BAD	QTY_BAD
Good signal quality	QTY_GOOD	QTY_GOOD	QTY_GOOD
GOOSE communication quality	QTY_GOOSE_COMM	QTY_GOOSE_COMM	QTY_GOOSE_COMM
Received GOOSE Test mode	QTY_GOOSE_TEST	QTY_GOOSE_TEST	QTY_GOOSE_TEST
GOOSE data health	T_HEALTH	T_HEALTH	T_HEALTH
Fault direction evaluation	T_DIR	T_DIR	T_DIR
Fault direction evaluation	T_DIR_FWD	T_DIR_FWD	T_DIR_FWD
Fault direction evaluation	T_DIR_REV	T_DIR_REV	T_DIR_REV
Enumerator to boolean conversion	T_TCMD	T_TCMD	T_TCMD
32-bit integer to binary command conversion	T_TCMD_BIN	T_TCMD_BIN	T_TCMD_BIN
Binary command to 32-bit integer conversion	T_BIN_TCMD	T_BIN_TCMD	T_BIN_TCMD
Switching device status decoder - CLOSE position	T_POS_CL	T_POS_CL	T_POS_CL
Switching device status decoder - OPEN position	T_POS_OP	T_POS_OP	T_POS_OP
Switching device status decoder - OK status	T_POS_OK	T_POS_OK	T_POS_OK
Controllable gate, 8 Channels	GATEGAPC	GATEGAPC	GATEGAPC
Security application	GSAL	GSAL	GSAL
Hotline tag	HLTGAPC	HLTGAPC	HLTGAPC
16 settable 32-bit integer values	SETI32GAPC	SETI32GAPC	SETI32GAPC
16 settable real values	SETRGAPC	SETRGAPC	SETRGAPC
Boolean to integer 32-bit conversion	T_B16_TO_I32	T_B16_TO_I32	T_B16_TO_I32

Table continues on the next page

Function	IEC 61850	IEC 60617	ANSI
Integer 8-bit to integer 32-bit conversion	T_I8_TO_I32	T_I8_TO_I32	T_I8_TO_I32
Integer 32-bit to boolean conversion	T_I32_TO_B16	T_I32_TO_B16	T_I32_TO_B16
Integer 32-bit to real conversion	T_I32_TO_R	T_I32_TO_R	T_I32_TO_R
Real to integer 8-bit conversion	T_R_TO_I8	T_R_TO_I8	T_R_TO_I8
Real to integer 32-bit conversion	T_R_TO_I32	T_R_TO_I32	T_R_TO_I32
Integer 8-bit to integer 32-bit	T_I8_TO_I32	T_I8_TO_I32	T_I8_TO_I32
Constant FALSE	FALSE	FALSE	FALSE
Constant TRUE	TRUE	TRUE	TRUE
Minimum, maximum and average value calculator	MINMAXAVE12R	MINMAXAVE12R	MINMAXAVE12R

34. Contents of application packages

REX615 offers basic functionality like measurements, power quality, supervision, control, recorders and logics functionality as base functionality. For protection functionality product offers various application packages. However, it is possible to further adapt the product to meet special installation needs by including any number of the available optional application packages into a single REX615 relay. For the selected application packages, the functionality can be extended by including the related add-on package. The REX615 connectivity package guides the engineer in optimizing the application configuration and its performance.

Table 265: Application packages

Description	ID
Current protection package	APP1
EF protection extension package	APP2
Feeder protection extension package	APP3
Fault locator package	APP4
Voltage protection package	APP5
Line differential protection package	APP6
Line differential protection (SMV based) package	APP61
Shunt capacitor protection package	APP7
Interconnection protection package	APP8
Machine protection package[1]	APP9
Power transformer protection package	APP10
Busbar protection package	APP11
OLTC control package	APP12
Line distance protection package	APP13

Table continues on the next page

[1] APP9 Machine protection package can be extended by add-on package ADD1 Synchronous add-on for machine protection or by ADD2 Machine differential-protection add-on for machine protection.

Description	ID
Synchronous add-on for machine protection	ADD1
Machine differential add-on for machine protection	ADD2

Table 266: Base and optional functionality

IEC 61850	Pcs	Base	APP 1	APP 2	APP 3	APP 4	APP 5	APP 6	APP 61	APP 7	APP8	APP9	ADD 1	ADD 2	APP 10	APP 11	APP 12	APP 13
Protection																		
DSTPDIS	1																	•
DSTPLAL	1																	•
DSOCPSCH	1																	•
CRWPSCH	1																	•
RESCPSCH	1																	•
RCRWPSCH	1																	•
DSTRPSB	1																	•
LNPLDF	1							•										
LN2PLDF	1								•									
BSTGAPC	1							•										•
CVPSOF	1		•															
PHLPTOC	3		•															
PHHPTOC	3		•															
PHIPTOC	3		•															
PHLTPTOC	1		•															
PHIPIOC	3		•															
PH3LPTOC	2		•															
PH3HPTOC	2		•															
PH3IPTOC	2		•															
DPHLPDOC	2				•			•	•		•		•		•			
DPHHPDOC	2				•			•	•		•		•		•			
DPH3LPDOC	2				•			•	•		•		•		•			
DPH3HPDOC	2				•			•	•		•		•		•			
EFLPTOC	3		•															
EFHPTOC	3		•															
EFIPTOC	3		•															
EFIPIOC	3		•															

Table continues on the next page

IEC 61850	Pcs	Base	APP 1	APP 2	APP 3	APP 4	APP 5	APP 6	APP 61	APP 7	APP8	APP9	ADD 1	ADD 2	APP 10	APP 11	APP 12	APP 13
DEFLPDEF	3		•															
DEFHPDEF	2		•															
DPSRDIR	2				•						•		•		•		•	
DNZSRDIR	2			•	•													
EFPADM	3			•														
MFADPSDE	3			•														
WPWDE	3			•														
INTRPTEF	1			•														
HAEFPTOC	1			•														
IFPTOC	3			•														
NSPTOC	3		•															
DNSPDOC	2				•			•	•						•			
PDNSPTOC	1		•															
ROVPTOV	4		•				•											
PHPTUV	4						•											
PHAPTUV	1						•											
PHVPTOV	2						•				•							
PHPTOV	4						•											
PHAPTOV	1						•											
PSPTOV	2						•											
PSPTUV	2						•											
NSPTOV	4						•											
FRPFRQ	10						•											
PHPVOC	2				•						•		•		•			
OEPVPH	2												•		•			
T1PTTR	1		•															
T2PTTR	1		•															
COLPTOC	1									•								
CUBPTOC	1									•								
HCUBPTOC	1									•								
SRCPTOC	1									•								

Table continues on the next page

IEC 61850	Pcs	Base	APP1	APP2	APP3	APP4	APP5	APP6	APP61	APP7	APP8	APP9	ADD1	ADD2	APP10	APP11	APP12	APP13
CNUPTOV	1									•								
CPHPTDV	1									•								
LVRTPTUV	3										•							
VVSPPAM	2										•							
DQPTUV	2										•							
DOPPDPR	3				•						•		•	•	•			
DUPPDPR	2				•								•	•	•			
UZPDIS	3												•		•			
DNZPDIS	2				•			•	•						•			
UEXPDIS	2												•					
H3EFPSEF	1												•					
MREFPTOC	1												•					
RPTTR	1												•	•				
MHZPDIF	1												•	•				
OOSRPSB	1												•					•
MNSPTOC	2											•						
PHPTUC	3		•															
LOFLPTUC	2											•						
JAMPTOC	2											•						
STTPMSU	1											•						
MSCPMRI	1											•						
PREVPTOC	1											•						
MPTTR	1											•						
MPDIF	1												•	•				
MPUPF	2				•						•		•		•			
TR2PTDF	1														•			
LREFPNDF	2		•															
HREFPDIF	2		•															
HIAPDIF	2												•	•	•	•		
HIBPDIF	2												•	•	•	•		
HICPDIF	2												•	•	•	•		

Table continues on the next page

IEC 61850	Pcs	Base	APP 1	APP 2	APP 3	APP 4	APP 5	APP 6	APP 61	APP 7	APP8	APP9	ADD 1	ADD 2	APP 10	APP 11	APP 12	APP 13
CCBRBRF	3	•																
INRPHAR	2		•															
RINRPHAR	2		•															
TRPPTRC	6	•																
ARCSARC	3	•																
PHIZ	1			•														
SCEFRFLO	1					•												
LSHDPFRQ	10						•											
LSHDGAPC	1						•											
MAPGAPC	20	•																
GAEPVOC	1												•					
LBRDOB	2				•			•	•									
RCFD	1			•	•													
CEPNDF	2		•															
CLPGAPC	2		•															
CDDPTOC	2		•															
FPHRPHS	2	•																
Control																		
CBXCBR	3	•																
DCXSWI	4	•																
ESXSWI	3	•																
DCSXSWI	4	•																
ESSXSWI	3	•																
P3SSXSWI	1	•																
ESMGAPC	1											•						
DARREC	2		•															
UPCALH	3	•																
SECRSYN	2						•											
OLATCC	1																•	
OL5ATCC	1																•	
OLGAPC	5																•	
TPOSYLTC	1														•		•	

Table continues on the next page

IEC 61850	Pcs	Base	APP 1	APP 2	APP 3	APP 4	APP 5	APP 6	APP 61	APP 7	APP8	APP9	ADD 1	ADD 2	APP 10	APP 11	APP 12	APP 13
Condition Monitoring and Supervision																		
SSCBR	3	●																
ESDCSSWI	7	●																
HSARSPTR	1														●			
TCSSCBR	3	●																
CCSPVC	2	●																
CTSRCTF	1														●			
LNCTSRCTF	1							●	●									
HZCCASPVC	2															●		
HZCCBSPVC	2															●		
HZCCCSPVC	2															●		
SEQSPVC	2	●																
PCSITPC	1							●										●
MDSOPT	2	●																
MSVPR	1						●											
PHSVPR	2						●											
Measurement																		
CMMXU	4	●																
CSMSQI	4	●																
RESCMMXU	4	●																
VMMXU	4	●																
VAMMXU	2	●																
VPHMMXU	2	●																
RESVMMXU	4	●																
VSMSQI	4	●																
PEMMXU	3	●																
SPEMMXU	1	●																
LDPRLRC	1	●																
FMMXU	3	●																
Power Quality																		
CHMHAI	2	●																
VHMHAI	2	●																

Table continues on the next page

IEC 61850	Pcs	Base	APP 1	APP 2	APP 3	APP 4	APP 5	APP 6	APP 61	APP 7	APP8	APP9	ADD 1	ADD 2	APP 10	APP 11	APP 12	APP 13
PHQVVR	2	●																
VSQVUB	2	●																
Traditional LED indication																		
LEDPTRC	1	●																
LED	11	●																
Logging functions																		
RDRE	1	●																
A1RADR	1	●																
B1RBDR	1	●																
B2RBDR	1	●																
FLTRFRC	1	●																
SER	1	●																
Other functionality																		
FKEYGGIO	1	●																
FKEY4GGIO	1	●																
PROTECTION	1	●																
GNRLLTMS	1	●																
FTPLPRT	1	●																
HTTPLPRT	1	●																
HMILDEV	1	●																
MMSLPRT	1	●																
GSELPRT	1	●																
I3CLPRT	2	●																
I5CLPRT	5	●																
DNPLPRT	5	●																
MBSLPRT	5	●																
MBMLPRT	1	●																
MMVGAPC	2	●																
MMVI4GAPC	5	●																
MMVF4GAPC	10	●																
OR	400	●																
OR6	400	●																

Table continues on the next page

IEC 61850	Pcs	Base	APP1	APP2	APP3	APP4	APP5	APP6	APP61	APP7	APP8	APP9	ADD1	ADD2	APP10	APP11	APP12	APP13
OR20	20	•																
AND	400	•																
AND6	400	•																
AND20	20	•																
XOR	400	•																
NOT	400	•																
MAX3R	20	•																
MIN3R	20	•																
R_TRIG	10	•																
F_TRIG	10	•																
SWITCHR	30	•																
SWITCHI32	30	•																
SR	30	•																
RS	30	•																
TPGAPC	4	•																
TPSGAPC	2	•																
TPMGAPC	2	•																
PTGAPC	8	•																
TOFGAPC	8	•																
TONGAPC	8	•																
DTMGAPC	4	•																
CALGAPC	4	•																
SRGAPC	4	•																
MVGAPC	10	•																
MVI4GAPC	4	•																
SCA4GAPC	4	•																
SPCGAPC	6	•																
SPCRGAPC	1	•																
SPCLGAPC	1	•																
INCGAPC	4	•																
UDFCNT	12	•																

Table continues on the next page

IEC 61850	Pcs	Base	APP 1	APP 2	APP 3	APP 4	APP 5	APP 6	APP 61	APP 7	APP8	APP9	ADD 1	ADD 2	APP 10	APP 11	APP 12	APP 13
CONTROL	1	•																
ADDR	10	•																
SUBR	10	•																
MULR	10	•																
DIVR	10	•																
EQR	10	•																
NER	10	•																
GER	10	•																
LER	10	•																
MINMAX-AVE12R	10	•																
VMSWI	2	•																
CMSUM	1	•																
CMSWI	2	•																
ILTCTR	4	•																
RESTCTR	4	•																
UTVTR	4	•																
SMVRCV	2	•																
SMVSENDER	1	•																
SMVSEND-ER61869	1	•																
SMV_QUALITY	24	•																
GOLGOS	20	•																
RCHLCCH	1	•																
SCHLCCH	1	•																
GOOSERCV_BIN	200	•																
GOOSERCV_DP	100	•																
GOOSERCV_MV	50	•																
GOOSERCV_INT8	50	•																
GOOSERCV_INT32	50	•																

Table continues on the next page

IEC 61850	Pcs	Base	APP 1	APP 2	APP 3	APP 4	APP 5	APP 6	APP 61	APP 7	APP8	APP9	ADD 1	ADD 2	APP 10	APP 11	APP 12	APP 13
GOOSERCV_INTL	100	●																
GOOSERCV_CMV	9	●																
GOOSERCV_ENUM	100	●																
QTY_BAD	20	●																
QTY_GOOD	20	●																
QTY_GOOSE_COMM	100	●																
QTY_GOOSE_TEST	100	●																
T_HEALTH	100	●																
T_DIR	150	●																
T_DIR_FWD	150	●																
T_DIR_REV	150	●																
T_TCMD	100	●																
T_TCMD_BIN	100	●																
T_BIN_TCMD	100	●																
T_POS_CL	150	●																
T_POS_OP	150	●																
T_POS_OK	150	●																
GATEGAPC	1	●																
GSAL	1	●																
HLTGAPC	1	●																
SETI32GAPC	2	●																
SETRGAPC	2	●																
T_B16_TO_I32	20	●																
T_I8_TO_I32	20	●																
T_I32_TO_B16	20	●																
T_I32_TO_R	20	●																
T_R_TO_I8	20	●																
T_R_TO_I32	20	●																
T_I8_TO_I32	20	●																

Table continues on the next page

IEC 61850	Pcs	Base	APP1	APP2	APP3	APP4	APP5	APP6	APP61	APP7	APP8	APP9	ADD1	ADD2	APP10	APP11	APP12	APP13
FALSE	10	•																
TRUE	10	•																
MINMAX-AVE12R	10	•																

35. Document revision history

Document revision/date	Product release	History
A/2024-03-27	PCL1	First release
B/2025-10-29	PCL1	Content updated
C/2026-02-25	PCL2	Content updated to correspond to the product connectivity level
D/2026-05-18	PCL3	Content updated to correspond to the product connectivity level
E/2026-07-09	PCL3	Content updated
F/2026-11-09	PCL4	Content updated to correspond to the product connectivity level

—
ABB Distribution Solutions
Digital Substation Products
P.O.Box 699
FI-65101 VAASA, Finland
Phone: +358 10 22 11

ABB India Ltd,
Digital Substation Products
Maneja Works
Vadodara-390013, India
Phone: +91 265 6724402
Fax: +91 265 6724407

abb.com/mediumvoltage
abb.com/relion
go.abb/digitalsubstations

© Copyright 2026 ABB. All rights reserved.

2NGA001867 F